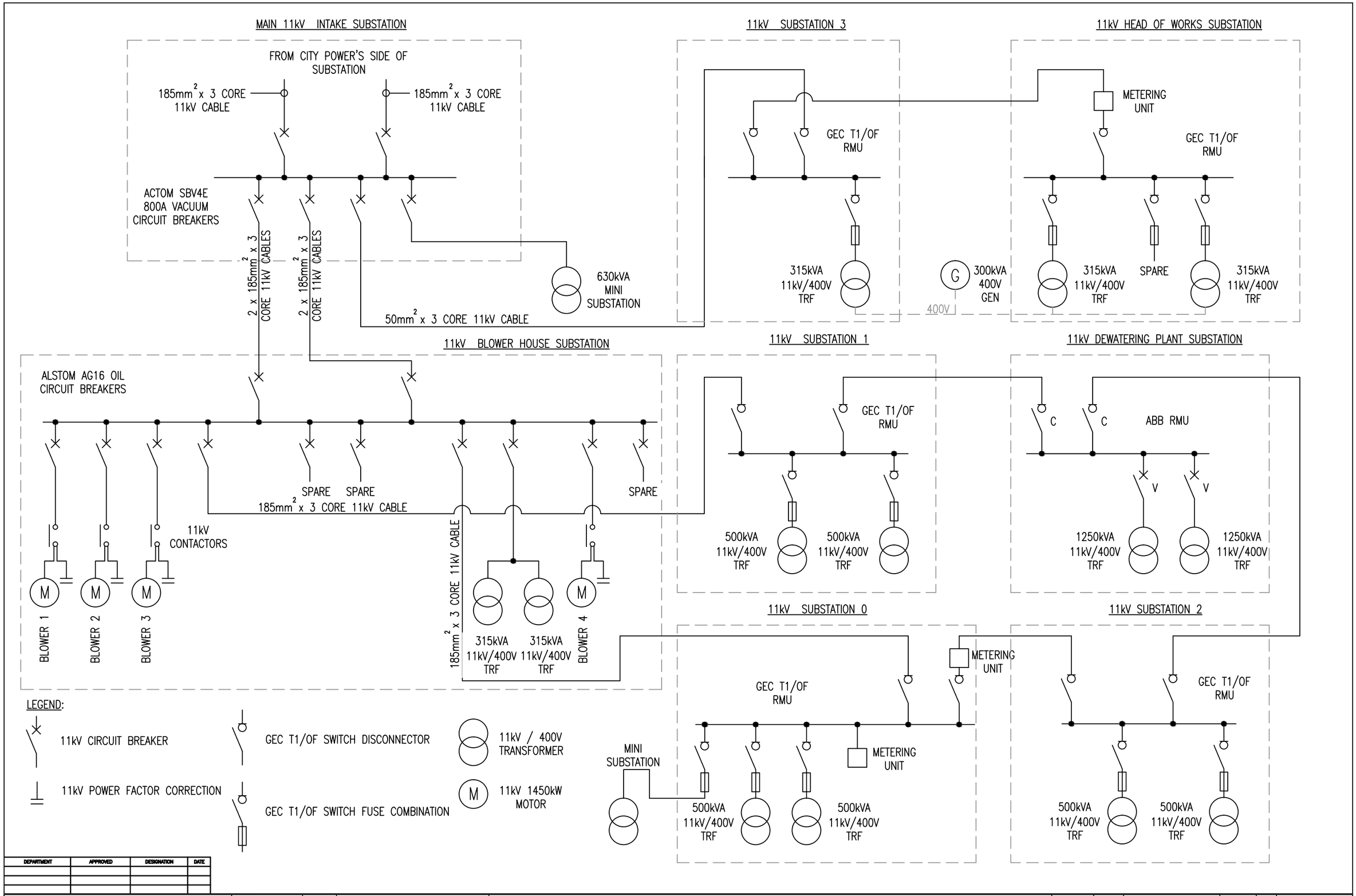

DEPARTMENT	APPROVED	DESIGNATION	DATE

CONSULTING ENGINEERS

ZITHOLELE CONSULTING

ZITHOLELE
P.O. BOX 6002
HALFWAY HOUSE
1685
TEL. 011-254 4800
FAX. 011-805 2100
EMAIL mail@zitholele.co.za

SURVEYED	
DESIGNED	DMcD
DRAWN	DMcD
CHECKED	
SERVICES CHECKED	
GEOTECHNICAL INVESTIGATION	
SERVITUDES	
APPROVED	DMcD
Pr. Eng. No.	200270017
DATE	AUGUST 2021

JOHANNESBURG WATER (PTY) LTD

Johannesburg Water

17 HARRISON STREET
MARSHALLTOWN
2107

TEL: (011) 688-1400
FAX: (011) 688-1529

CITY OF JOHANNESBURG

BUSHKOPPIE WASTEWATER TREATMENT WORKS

INFRASTRUCTURE RENEWAL PLAN
EXISTING MV RETICULATION
SINGLE LINE DIAGRAM

DESIGN MANAGER

DATE: AUG 21

SCALE: NTS

AMENDMENTS		APPROVED	DATE
T00	ISSUED FOR TENDER	DMcD	AUG 21

DRAWING No.

JW NUMBER

CONSULTANT'S NUMBER 18056-73-12-100

FILE No 18056

T 0 0

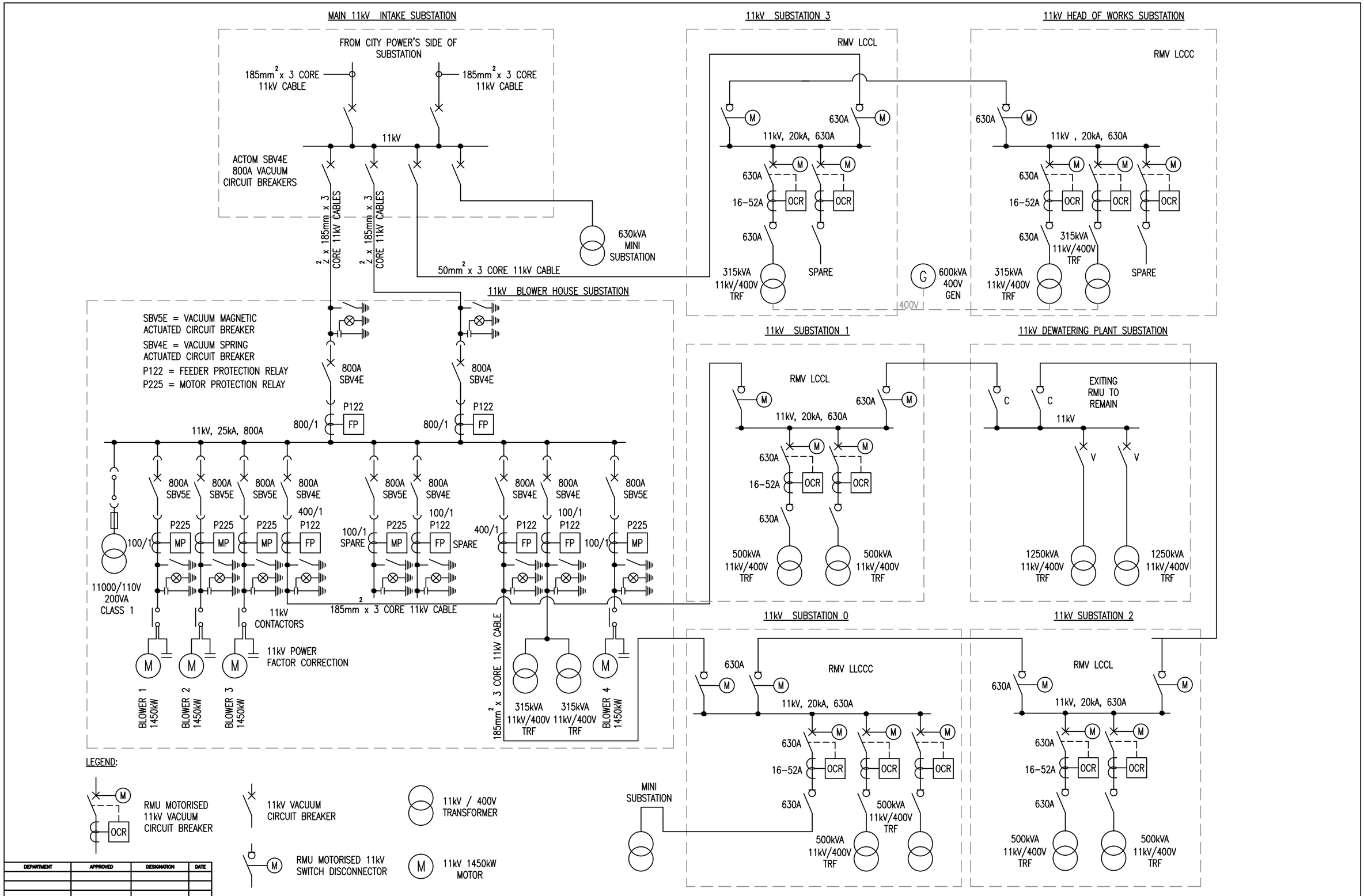

DEPARTMENT	APPROVED	DESIGNATION	DATE

CONSULTING ENGINEERS

ZITHOLELE CONSULTING

ZITHOLELE
P.O. BOX 6002
HALFWAY HOUSE
1685
TEL. 011-254 4800
FAX. 011-805 2100
EMAIL mail@zitholele.co.za

SURVEYED	
DESIGNED	DMcD
DRAWN	DMcD
CHECKED	
SERVICES CHECKED	
GEOTECHNICAL INVESTIGATION	
SERVITUDES	
APPROVED	DMcD
Pr. Eng. No.	200270017
DATE	AUGUST 2021

JOHANNESBURG WATER (PTY) LTD

Johannesburg Water

17 HARRISON STREET
MARSHALLTOWN
2107

TEL: (011) 688-1400
FAX: (011) 688-1529

CITY OF JOHANNESBURG

BUSHKOPPIE WASTEWATER TREATMENT WORKS

INFRASTRUCTURE RENEWAL PLAN
PROPOSED MV RETICULATION
SINGLE LINE DIAGRAM

DESIGN MANAGER

DATE: AUG 21

SCALE: NTS

AMENDMENTS		APPROVED	DATE
T00	ISSUED FOR TENDER	DMcD	AUG 21
T01	ISSUED FOR TENDER	DMcD	MAR 24

DRAWING No.

JW NUMBER

CONSULTANT'S NUMBER 18056-73-12-101

FILE No 18056

T 0 1

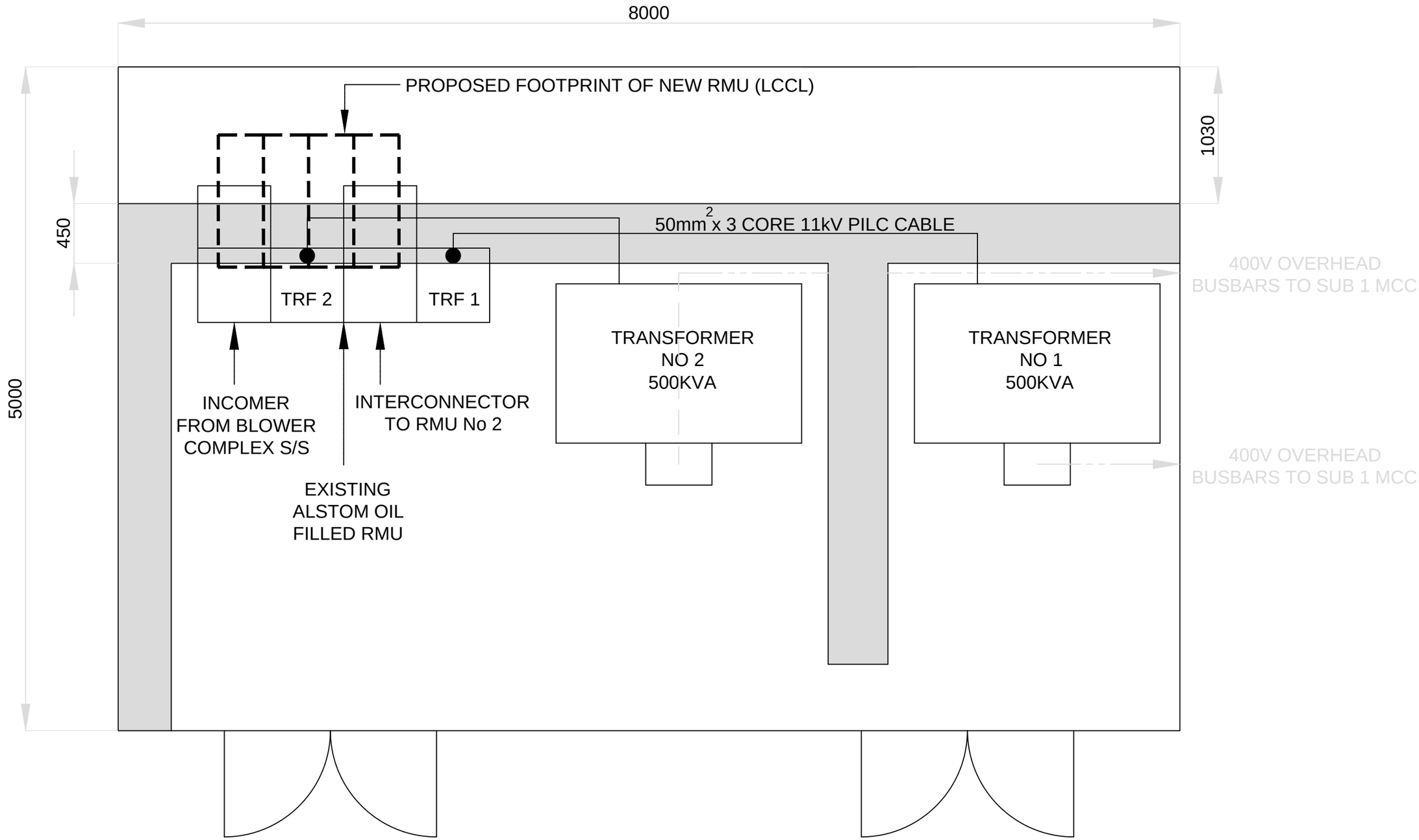

DEPARTMENT	APPROVED	DESIGNATION	DATE

CONSULTING ENGINEERS

ZITHOLELE CONSULTING

ZITHOLELE
P.O. BOX 6002
HALFWAY HOUSE
1685
TEL. 011-254 4800
FAX. 011-805 2100
EMAIL mail@zitholele.co.za

SURVEYED	
DESIGNED	DMcD
DRAWN	DMcD
CHECKED	
SERVICES CHECKED	
GEOTECHNICAL INVESTIGATION	
SERVITUDES	
APPROVED	DMcD
Pr. Eng. No.	200270017
DATE	AUGUST 2021

JOHANNESBURG WATER (PTY) LTD

Johannesburg Water

17 HARRISON STREET
MARSHALLTOWN
2107

TEL: (011) 688-1400
FAX: (011) 688-1529

CITY OF JOHANNESBURG

BUSHKOPPIE WASTEWATER TREATMENT WORKS

INFRASTRUCTURE RENEWAL PLAN
SUBSTATION No 1
LAYOUT

DESIGN MANAGER

DATE: AUG 21

SCALE: 1:30

	AMENDMENTS	APPROVED	DATE
T00	ISSUED FOR TENDER	DMcD	AUG 21

DRAWING No.

JW NUMBER

CONSULTANT'S NUMBER
18056-73-12-102

FILE No
18056

T 0 0

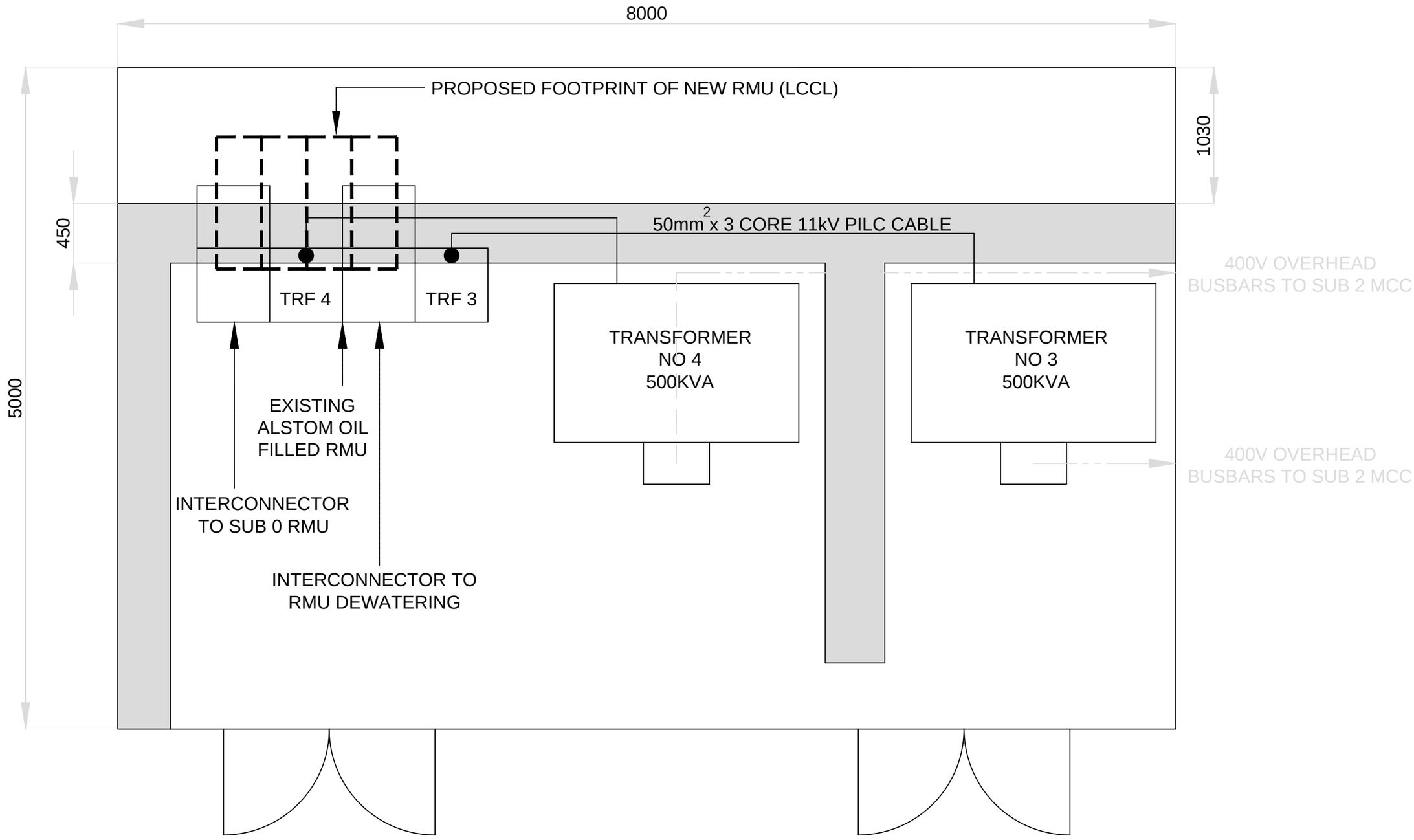

DEPARTMENT	APPROVED	DESIGNATION	DATE

CONSULTING ENGINEERS

ZITHOLELE CONSULTING

ZITHOLELE
P.O. BOX 6002
HALFWAY HOUSE
1685
TEL. 011-254 4800
FAX. 011-805 2100
EMAIL mail@zitholele.co.za

SURVEYED	
DESIGNED	DMcD
DRAWN	DMcD
CHECKED	
SERVICES CHECKED	
GEOTECHNICAL INVESTIGATION	
SERVITUDES	
APPROVED	DMcD
Pr. Eng. No.	200270017
DATE	AUGUST 2021

JOHANNESBURG WATER (PTY) LTD

Johannesburg Water

17 HARRISON STREET
MARSHALLTOWN
2107

TEL: (011) 688-1400
FAX: (011) 688-1529

CITY OF JOHANNESBURG

BUSHKOPPIE WASTEWATER TREATMENT WORKS

INFRASTRUCTURE RENEWAL PLAN
SUBSTATION No 2
LAYOUT

DESIGN MANAGER

DATE: AUG 21

SCALE 1:30

	AMENDMENTS	APPROVED	DATE
T00	ISSUED FOR TENDER	DMcD	AUG 21

DRAWING No.

JW NUMBER

CONSULTANT'S NUMBER
18056–73–12–103

FILE No
18056

T 0 0

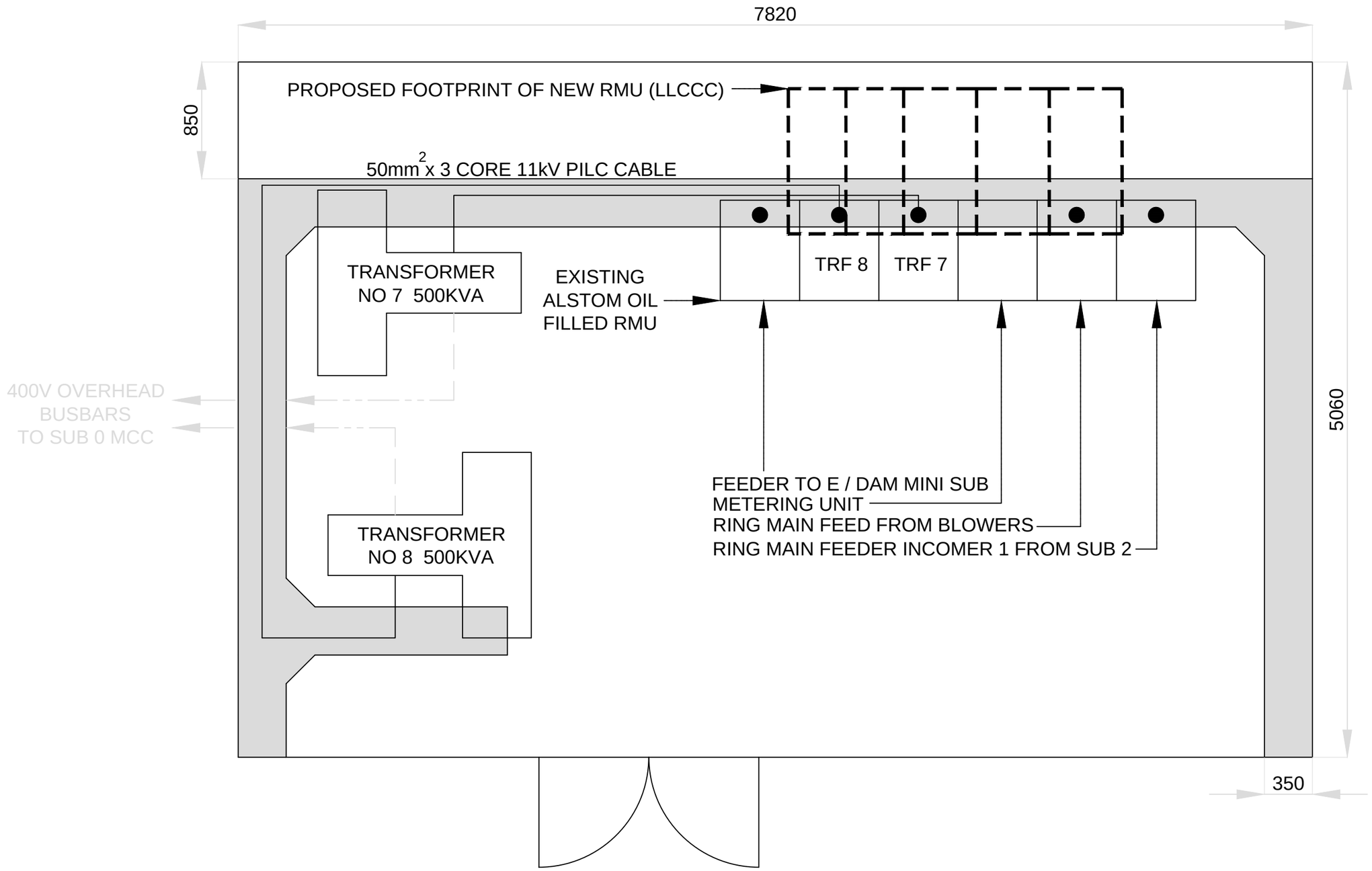

DEPARTMENT	APPROVED	DESIGNATION	DATE

CONSULTING ENGINEERS

ZITHOLELE CONSULTING

ZITHOLELE
P.O. BOX 6002
HALFWAY HOUSE
1685
TEL. 011-254 4800
FAX. 011-805 2100
EMAIL mail@zitholele.co.za

SURVEYED	
DESIGNED	DMcD
DRAWN	DMcD
CHECKED	
SERVICES CHECKED	
GEOTECHNICAL INVESTIGATION	
SERVITUDES	
APPROVED	DMcD
Pr. Eng. No.	200270017
DATE	AUGUST 2021

JOHANNESBURG WATER (PTY) LTD

Johannesburg Water

17 HARRISON STREET
MARSHALLTOWN
2107

TEL: (011) 688-1400
FAX: (011) 688-1529

CITY OF JOHANNESBURG

BUSHKOPPIE WASTEWATER TREATMENT WORKS

INFRASTRUCTURE RENEWAL PLAN
SUBSTATION No 0
LAYOUT

DESIGN MANAGER

DATE: AUG 21

SCALE 1:30

AMENDMENTS		APPROVED	DATE
T00	ISSUED FOR TENDER	DMcD	AUG 21

DRAWING No.

JW NUMBER

CONSULTANT'S NUMBER
18056-73-12-104

FILE No
18056

T 0 0

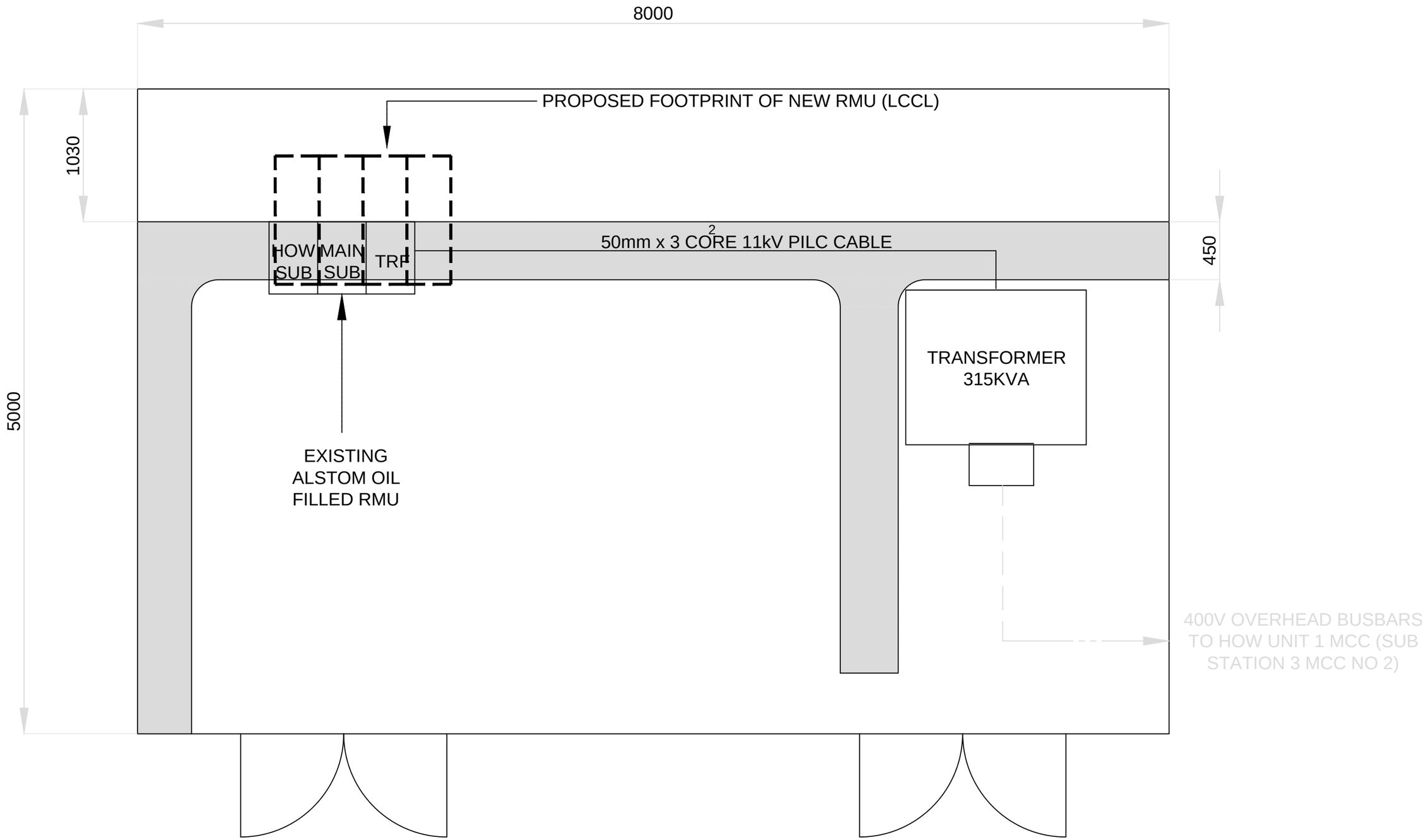

DEPARTMENT	APPROVED	DESIGNATION	DATE

CONSULTING ENGINEERS

ZITHOLELE CONSULTING

ZITHOLELE
P.O. BOX 6002
HALFWAY HOUSE
1685
TEL. 011-254 4800
FAX. 011-805 2100
EMAIL mail@zitholele.co.za

SURVEYED	
DESIGNED	DMcD
DRAWN	DMcD
CHECKED	
SERVICES CHECKED	
GEOTECHNICAL INVESTIGATION	
SERVITUDES	
APPROVED	DMcD
Pr. Eng. No.	200270017
DATE	AUGUST 2021

JOHANNESBURG WATER (PTY) LTD

Johannesburg Water

17 HARRISON STREET
MARSHALLTOWN
2107

TEL: (011) 688-1400
FAX: (011) 688-1529

CITY OF JOHANNESBURG

BUSHKOPPIE WASTEWATER TREATMENT WORKS

INFRASTRUCTURE RENEWAL PLAN
SUBSTATION No 3
LAYOUT

DESIGN MANAGER

DATE: AUG 21

SCALE: 1:30

AMENDMENTS		APPROVED	DATE
T00	ISSUED FOR TENDER	DMcD	AUG 21

DRAWING No.

JW NUMBER

CONSULTANT'S NUMBER
18056-73-12-105

FILE No
18056

T 0 0

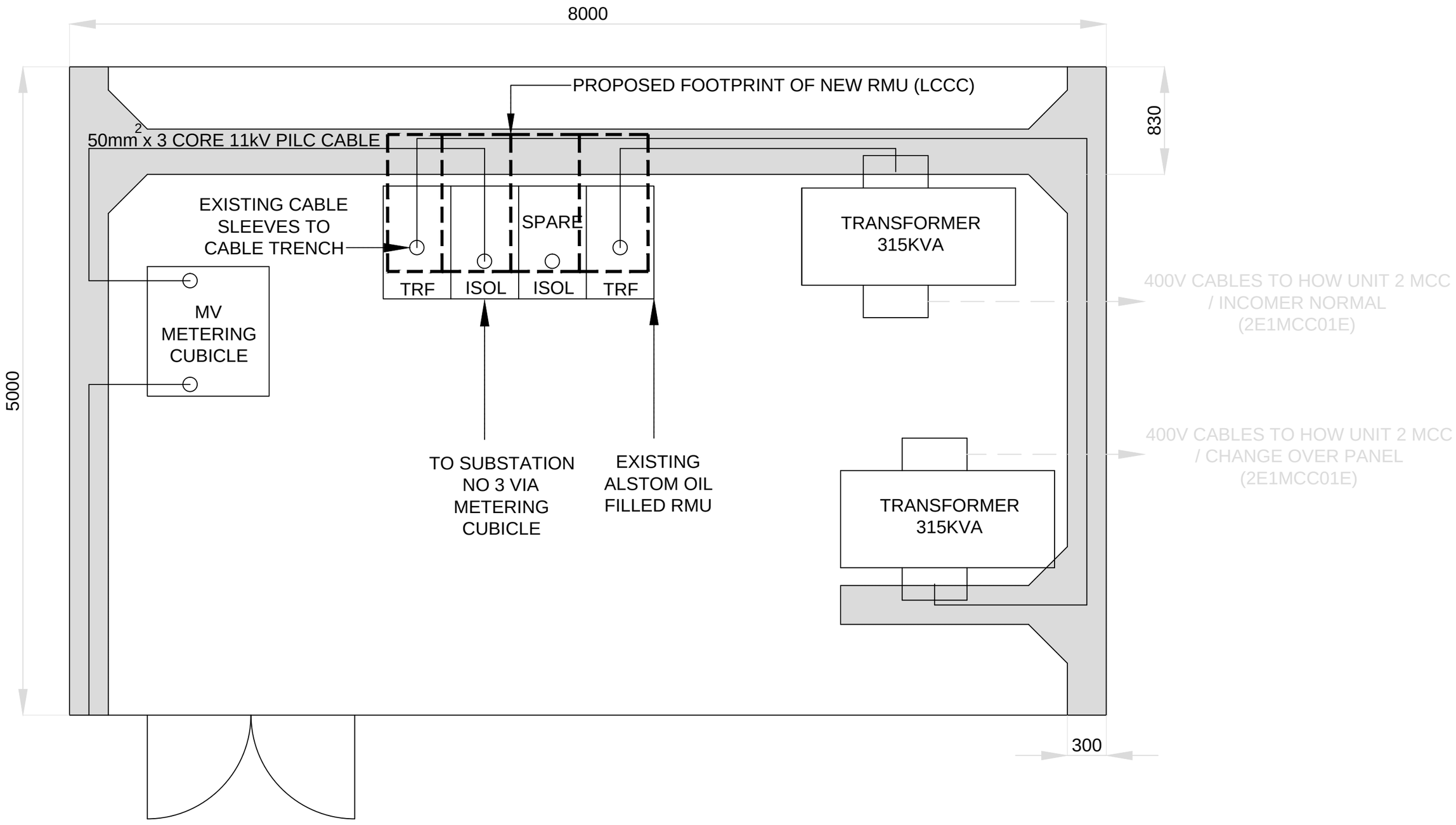

DEPARTMENT	APPROVED	DESIGNATION	DATE

CONSULTING ENGINEERS

ZITHOLELE CONSULTING

ZITHOLELE
P.O. BOX 6002
HALFWAY HOUSE
1685
TEL. 011-254 4800
FAX. 011-805 2100
EMAIL mail@zitholele.co.za

SURVEYED	
DESIGNED	DMcD
DRAWN	DMcD
CHECKED	
SERVICES CHECKED	
GEOTECHNICAL INVESTIGATION	
SERVITUDES	
APPROVED	DMcD
Pr. Eng. No.	200270017
DATE	AUGUST 2021

JOHANNESBURG WATER (PTY) LTD

Johannesburg Water

17 HARRISON STREET
MARSHALLTOWN
2107

TEL: (011) 688-1400
FAX: (011) 688-1529

CITY OF JOHANNESBURG

BUSHKOPPIE WASTEWATER TREATMENT WORKS

INFRASTRUCTURE RENEWAL PLAN
HOW SUBSTATION
LAYOUT

DESIGN MANAGER

DATE: AUG 21

SCALE 1:30

	AMENDMENTS	APPROVED	DATE
T00	ISSUED FOR TENDER	DMcD	AUG 21

DRAWING No.

JW NUMBER

CONSULTANT'S NUMBER 18056-73-12-106

FILE No 18056

T 0 0

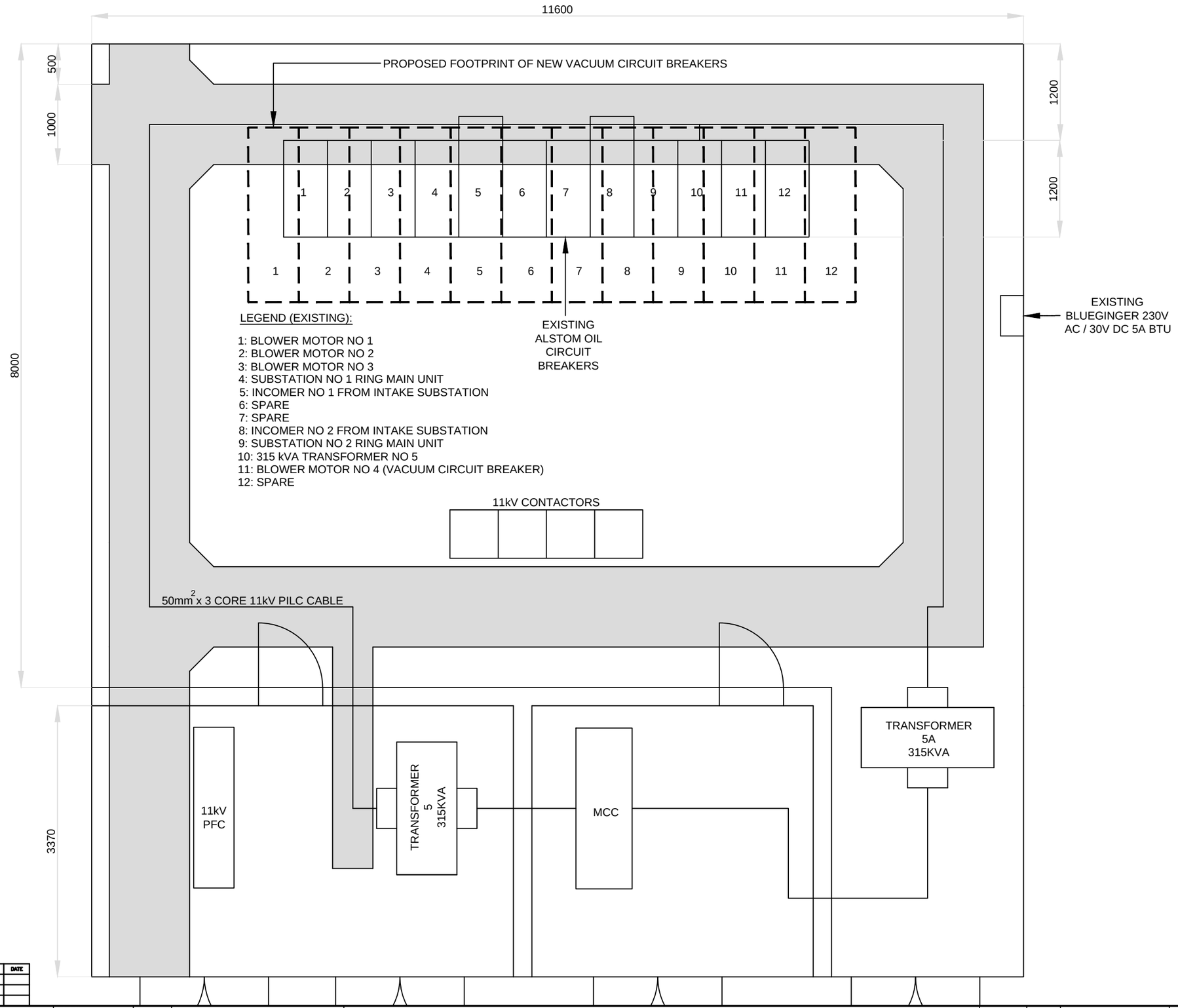

DEPARTMENT	APPROVED	DESIGNATION	DATE

CONSULTING ENGINEERS

ZITHOLELE CONSULTING

ZITHOLELE
P.O. BOX 6002
HALFWAY HOUSE
1685
TEL. 011-254 4800
FAX. 011-805 2100
EMAIL mail@zitholele.co.za

SURVEYED		
DESIGNED	DMcD	
DRAWN	DMcD	
CHECKED		
SERVICES CHECKED		
GEOTECHNICAL INVESTIGATION		
SERVITUDES		
APPROVED	DMcD	
Pr. Eng. No.	200270017	
DATE	AUGUST 2021	

JOHANNESBURG WATER (PTY) LTD

Johannesburg Water

17 HARRISON STREET
MARSHALLTOWN
2107

TEL: (011) 688-1400
FAX: (011) 688-1529

CITY OF JOHANNESBURG

BUSHKOPPIE WASTEWATER TREATMENT WORKS

INFRASTRUCTURE RENEWAL PLAN
BLOWERS SUBSTATION
LAYOUT

DESIGN MANAGER

DATE: AUG 21

SCALE 1:50

AMENDMENTS		APPROVED	DATE
T00	ISSUED FOR TENDER	DMcD	AUG 21

DRAWING No.

JW NUMBER

CONSULTANT'S NUMBER 18056-73-12-107

FILE No 18056

T 0 0

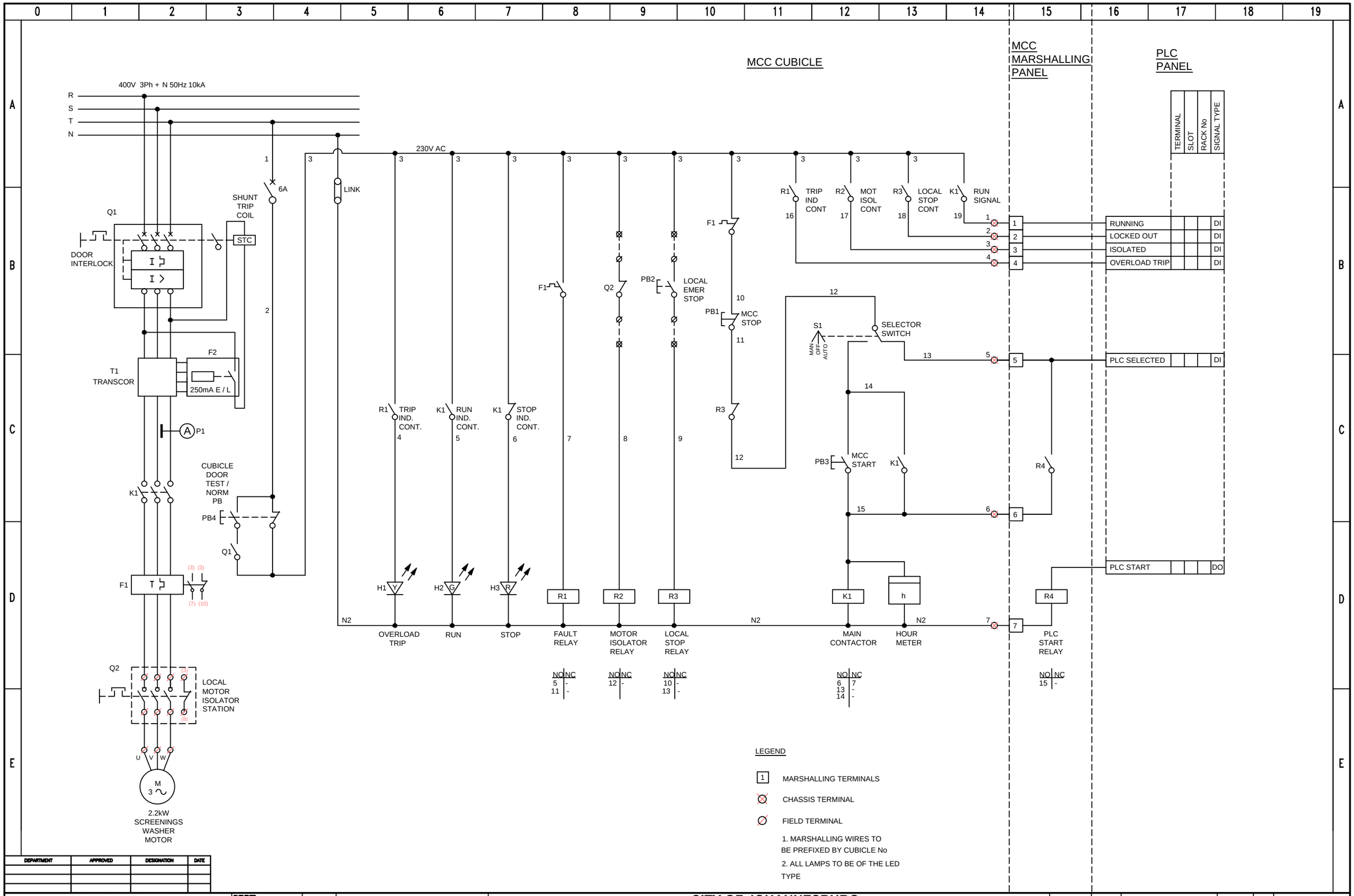

DEPARTMENT	APPROVED	DESIGNATION	DATE

CONSULTING ENGINEERS

ZITHOLELE CONSULTING

ZITHOLELE
P.O. BOX 6002
HALFWAY HOUSE
1685
TEL. 011-254 4800
FAX. 011-805 2100
EMAIL mail@zitholele.co.za

SURVEYED	
DESIGNED	DMcD
DRAWN	DMcD
CHECKED	
SERVICES CHECKED	
GEOTECHNICAL INVESTIGATION	
SERVITUDES	

APPROVED: DMcD
Pr. Eng. No: 200270017.
DATE: AUGUST 2021

JOHANNESBURG WATER (PTY) LTD

Johannesburg Water

17 HARRISON STREET
MARSHALLTOWN
2107

TEL: (011) 688-1400
FAX: (011) 688-1529

CITY OF JOHANNESBURG

BUSHKOPPIE WASTEWATER TREATMENT WORKS

INFRASTRUCTURE RENEWAL PLAN
HOW TYPICAL 2.2kW SCREENINGS WASHER
DOL STARTER DRIVE SCHEMATIC

DESIGN MANAGER

DATE: AUG 21

SCALE: NTS

T00	AMENDMENTS	APPROVED	DATE
	ISSUED FOR TENDER	DMcD	AUG 21

DRAWING No.
JW NUMBER
CONSULTANT'S NUMBER 18056-73-12-108
FILE No 18056
T 0 0

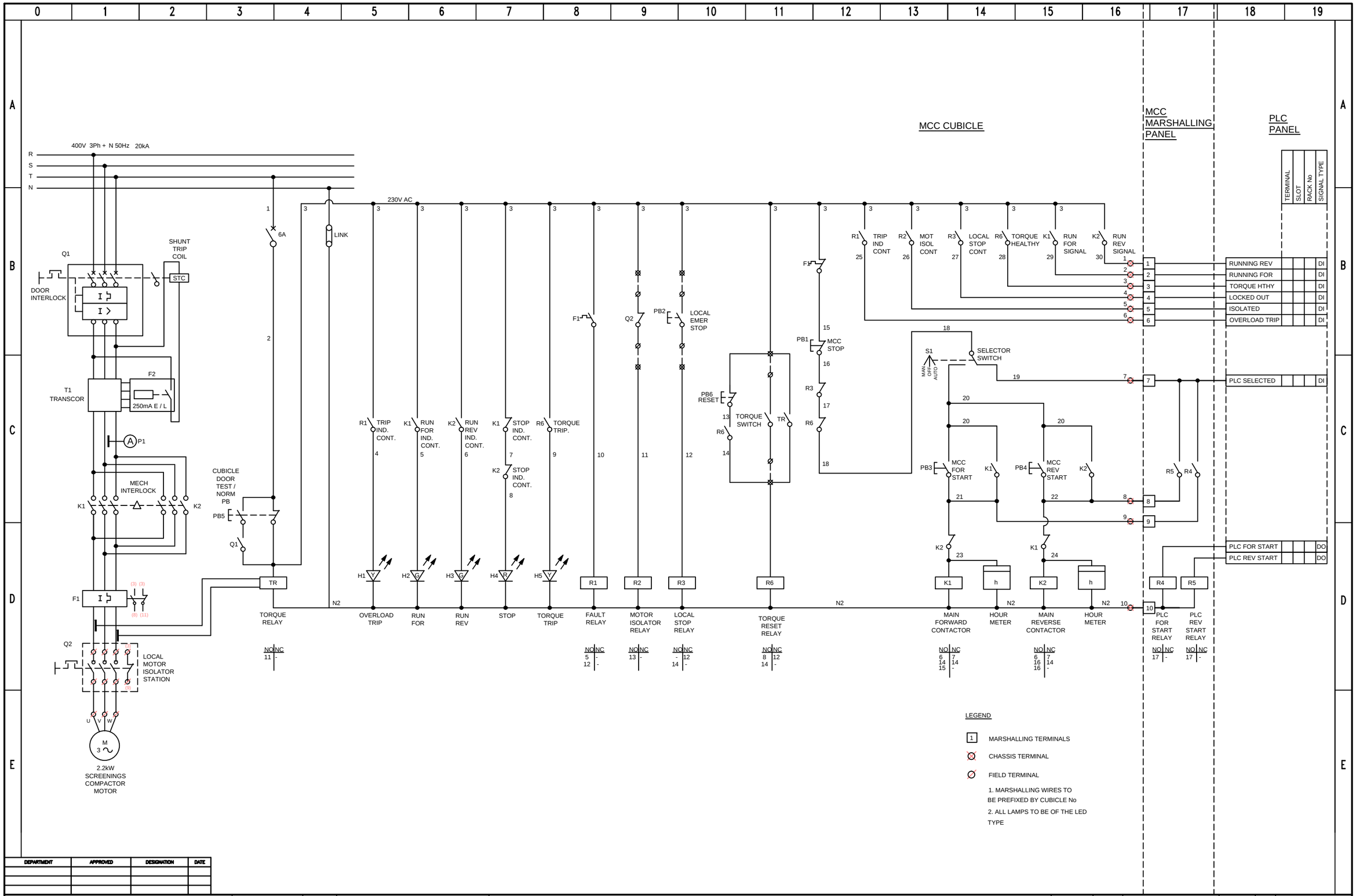

DEPARTMENT	APPROVED	DESIGNATION	DATE

CONSULTING ENGINEERS

ZITHOLELE CONSULTING

ZITHOLELE
P.O. BOX 6002
HALFWAY HOUSE
1685
TEL. 011-254 4800
FAX. 011-805 2100
EMAIL mail@zitholele.co.za

SURVEYED	
DESIGNED	DMcD
DRAWN	DMcD
CHECKED	
SERVICES CHECKED	
GEOTECHNICAL INVESTIGATION	
SERVITUDES	

APPROVED: DMcD
Pr. Eng. No: 200270017.
DATE: AUGUST 2021

JOHANNESBURG WATER (PTY) LTD

Johannesburg Water

17 HARRISON STREET
MARSHALLTOWN
2107

TEL: (011) 688-1400
FAX: (011) 688-1529

CITY OF JOHANNESBURG

BUSHKOPPIE WASTEWATER TREATMENT WORKS

INFRASTRUCTURE RENEWAL PLAN
HOW TYPICAL 2.2kW SCREENINGS COMPACTOR
FORWARD / REVERSE STARTER DRIVE SCHEMATIC

DESIGN MANAGER

DATE: AUG 21

SCALE: NTS

AMENDMENTS		APPROVED	DATE
T00	ISSUED FOR TENDER	DMcD	AUG 21
T01	ISSUED FOR TENDER	DMcD	MAR 24

DRAWING No.

JW NUMBER

CONSULTANT'S NUMBER
18056-73-12-109

FILE No
18056

T 0 1

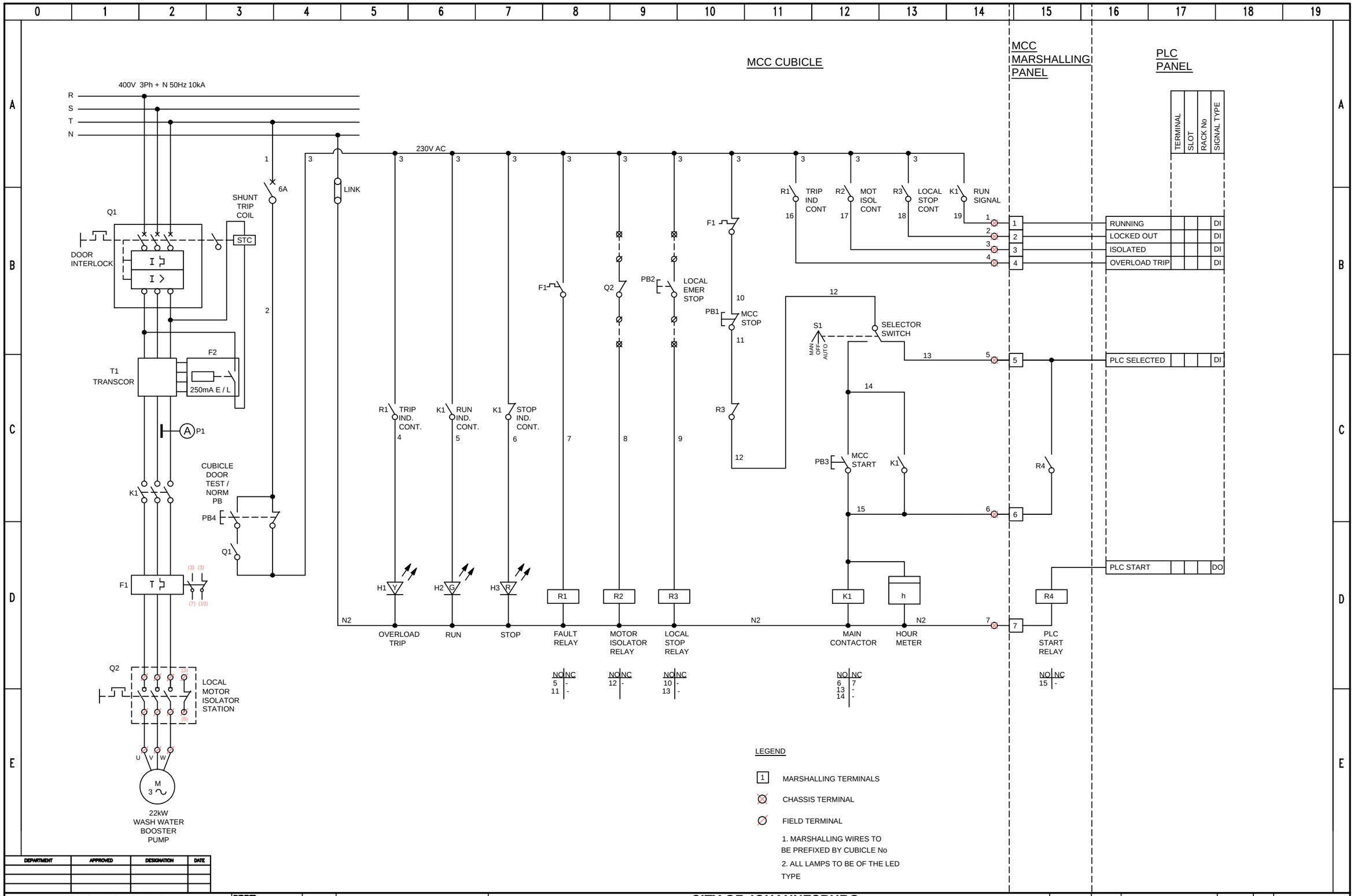

DEPARTMENT	APPROVED	DESIGNATION	DATE

CONSULTING ENGINEERS

ZITHOLELE CONSULTING

ZITHOLELE
P.O. BOX 6002
HALFWAY HOUSE
1685
TEL. 011-254 4800
FAX. 011-805 2100
EMAIL mail@zitholele.co.za

SURVEYED	
DESIGNED	DMcD
DRAWN	DMcD
CHECKED	
SERVICES CHECKED	
GEOTECHNICAL INVESTIGATION	
SERVITUDES	

APPROVED: DMcD
Pr. Eng. No: 200270017.
DATE: AUGUST 2021

JOHANNESBURG WATER (PTY) LTD

Johannesburg Water

17 HARRISON STREET
MARSHALLTOWN
2107

TEL: (011) 688-1400
FAX: (011) 688-1529

CITY OF JOHANNESBURG

BUSHKOPPIE WASTEWATER TREATMENT WORKS

INFRASTRUCTURE RENEWAL PLAN
HOW TYPICAL 22kW WASH WATER BOOSTER PUMP
DOL STARTER DRIVE SCHEMATIC

DESIGN MANAGER

DATE: AUG 21

SCALE: NTS

T00	AMENDMENTS	APPROVED	DATE
	ISSUED FOR TENDER	DMcD	AUG 21

DRAWING No.
JW NUMBER
CONSULTANT'S NUMBER 18056-73-12-110
FILE No 18056
T 0 0

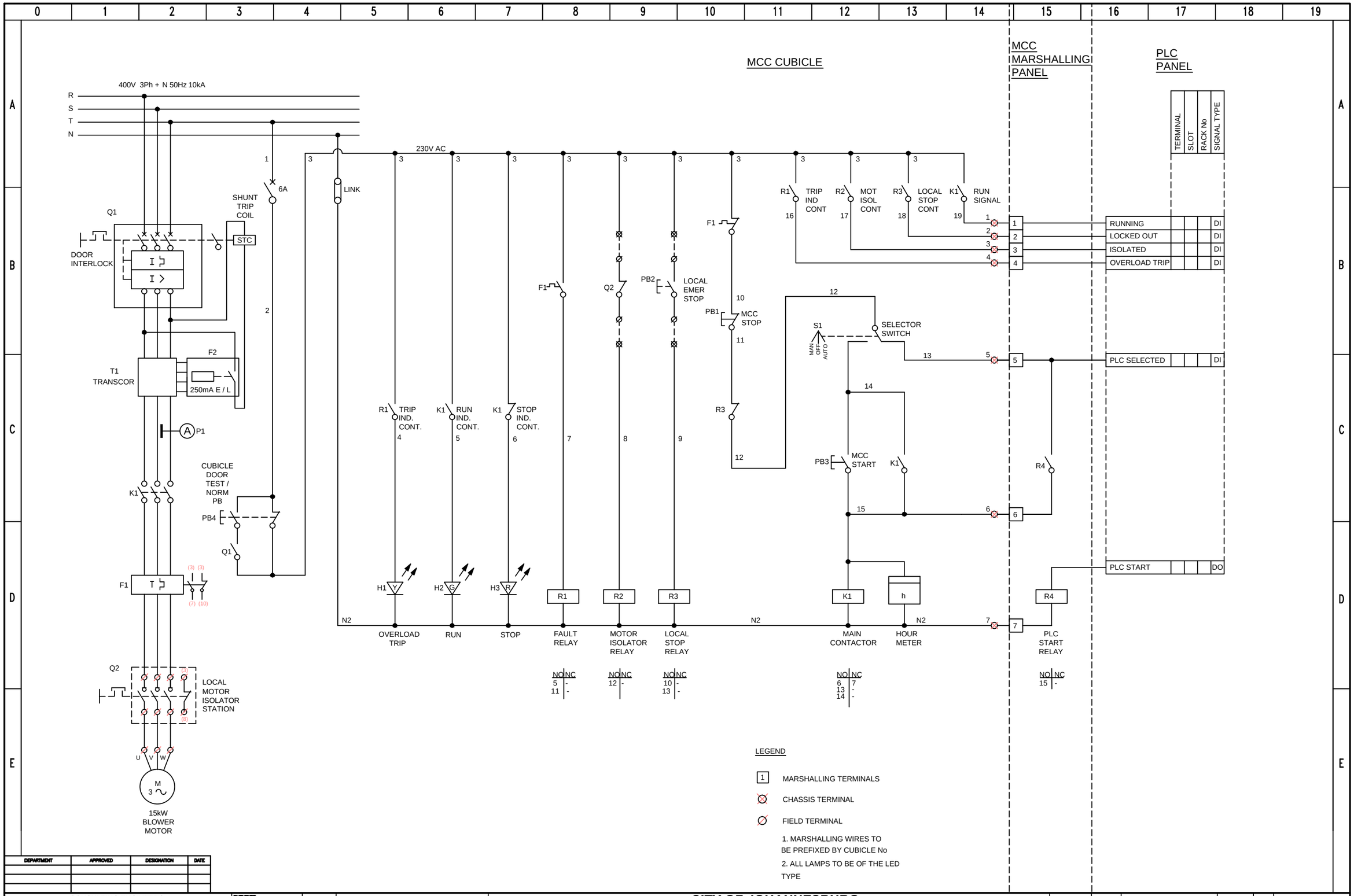

DEPARTMENT	APPROVED	DESIGNATION	DATE

CONSULTING ENGINEERS

ZITHOLELE CONSULTING

ZITHOLELE
P.O. BOX 6002
HALFWAY HOUSE
1685
TEL. 011-254 4800
FAX. 011-805 2100
EMAIL mail@zitholele.co.za

SURVEYED	
DESIGNED	DMcD
DRAWN	DMcD
CHECKED	
SERVICES CHECKED	
GEOTECHNICAL INVESTIGATION	
SERVITUDES	

APPROVED: DMcD
Pr. Eng. No: 200270017.
DATE: AUGUST 2021

JOHANNESBURG WATER (PTY) LTD

Johannesburg Water

17 HARRISON STREET
MARSHALLTOWN
2107

TEL: (011) 688-1400
FAX: (011) 688-1529

CITY OF JOHANNESBURG

BUSHKOPPIE WASTEWATER TREATMENT WORKS

INFRASTRUCTURE RENEWAL PLAN
HOW TYPICAL 15kW AIR BLOWER
DOL STARTER DRIVE SCHEMATIC

DESIGN MANAGER

DATE: AUG 21

SCALE: NTS

	AMENDMENTS	APPROVED	DATE
T00	ISSUED FOR TENDER	DMcD	AUG 21

DRAWING No.
JW NUMBER
CONSULTANT'S NUMBER 18056-73-12-111
FILE No 18056
T 0 0

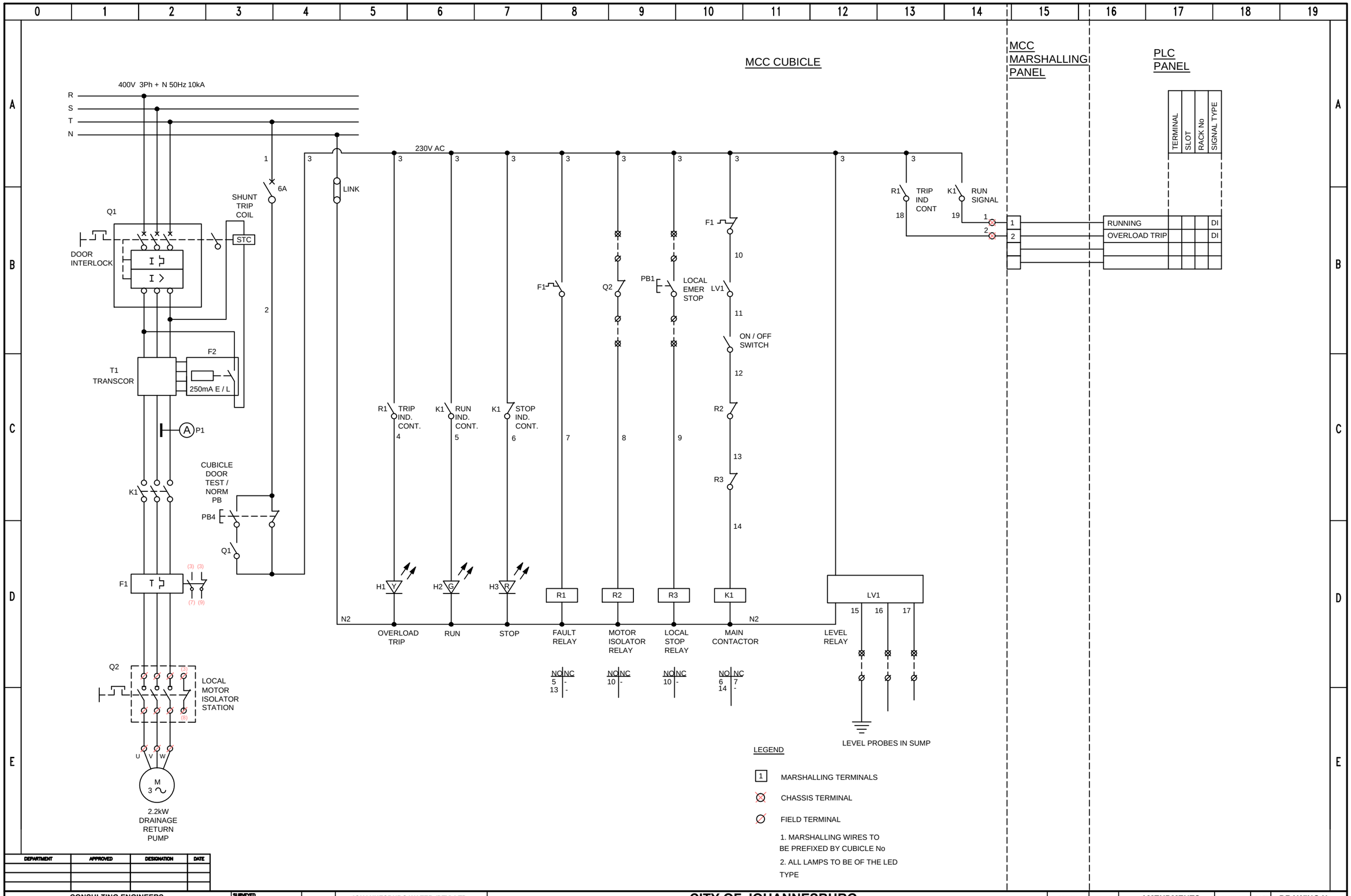

DEPARTMENT	APPROVED	DESIGNATION	DATE

CONSULTING ENGINEERS

ZITHOLELE CONSULTING

ZITHOLELE
P.O. BOX 6002
HALFWAY HOUSE
1685
TEL. 011-254 4800
FAX. 011-805 2100
EMAIL mail@zitholele.co.za

SURVEYED	
DESIGNED	DMcD
DRAWN	DMcD
CHECKED	
SERVICES CHECKED	
GEOTECHNICAL INVESTIGATION	
SERVITUDES	

APPROVED: DMcD
Pr. Eng. No: 200270017.
DATE: AUGUST 2021

JOHANNESBURG WATER (PTY) LTD

Johannesburg Water

17 HARRISON STREET
MARSHALLTOWN
2107

TEL: (011) 688-1400
FAX: (011) 688-1529

CITY OF JOHANNESBURG

BUSHKOPPIE WASTEWATER TREATMENT WORKS

INFRASTRUCTURE RENEWAL PLAN
HOW 2.2kW DRAINAGE RETURN PUMP
STARTER DRIVE SCHEMATIC

DESIGN MANAGER

DATE: AUG 21

SCALE: NTS

AMENDMENTS	APPROVED	DATE
T00 ISSUED FOR TENDER	DMcD	AUG 21

DRAWING No.
JW NUMBER
CONSULTANT'S NUMBER 18056-73-12-112
FILE No 18056
T 0 0

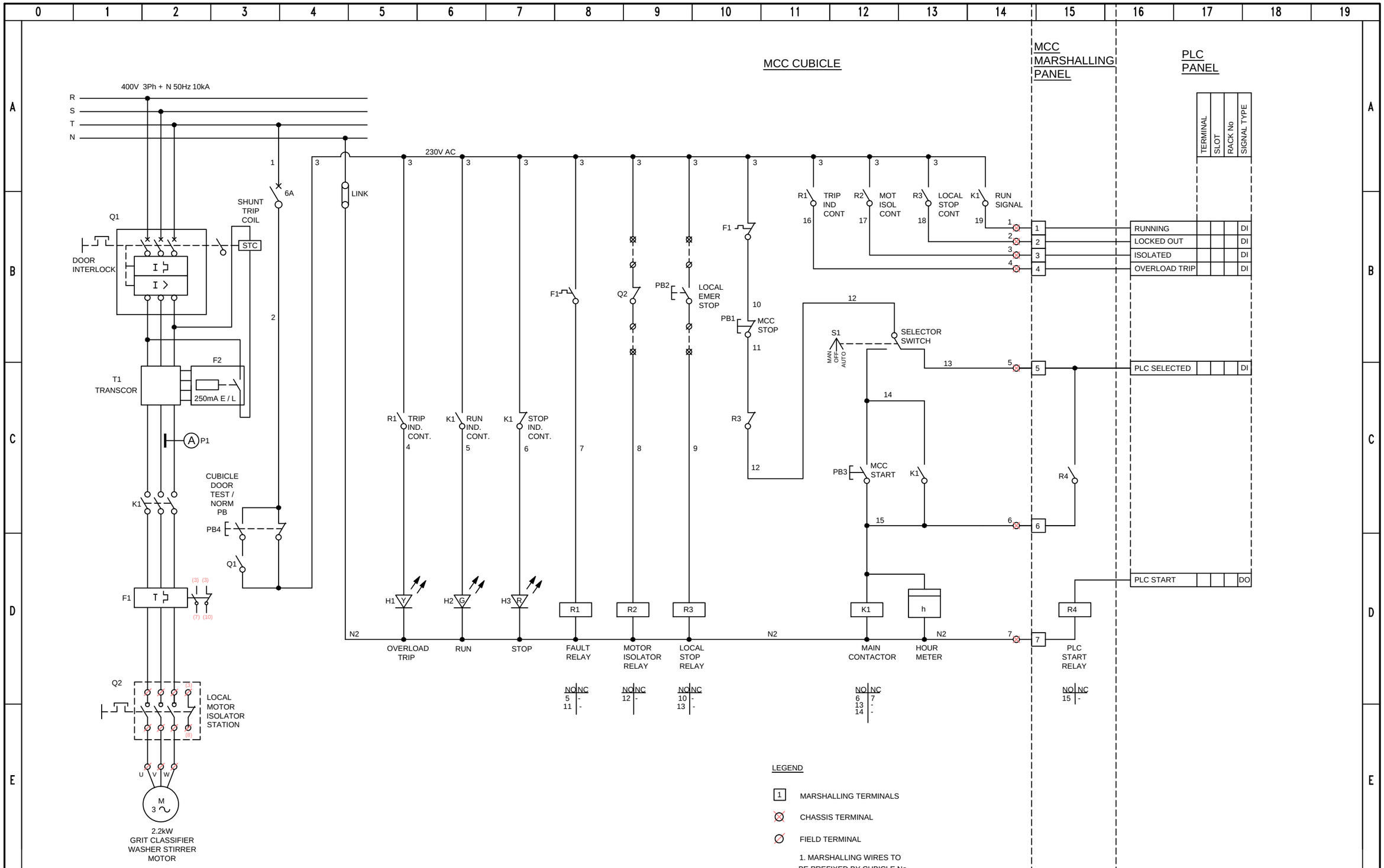

DEPARTMENT	APPROVED	DESIGNATION	DATE

CONSULTING ENGINEERS

ZITHOLELE CONSULTING

ZITHOLELE
P.O. BOX 6002
HALFWAY HOUSE
1685
TEL. 011-254 4800
FAX. 011-805 2100
EMAIL mail@zitholele.co.za

SURVEYED	
DESIGNED	DMcD
DRAWN	DMcD
CHECKED	
SERVICES CHECKED	
GEOTECHNICAL INVESTIGATION	
SERVITUDES	

APPROVED: DMcD
Pr. Eng. No: 200270017.
DATE: AUGUST 2021

JOHANNESBURG WATER (PTY) LTD

Johannesburg Water

17 HARRISON STREET
MARSHALLTOWN
2107

TEL: (011) 688-1400
FAX: (011) 688-1529

CITY OF JOHANNESBURG

BUSHKOPPIE WASTEWATER TREATMENT WORKS

INFRASTRUCTURE RENEWAL PLAN
HOW MODULE 1 TYPICAL 2.2kW GRIT CLASSIFIER WASHER STIRRER
DOL STARTER DRIVE SCHEMATIC

DESIGN MANAGER

DATE: AUG 21

SCALE: NTS

T00	AMENDMENTS	APPROVED	DATE
	ISSUED FOR TENDER	DMcD	AUG 21

DRAWING No.
JW NUMBER
CONSULTANT'S NUMBER 18056-73-12-113
FILE No 18056
T 0 0

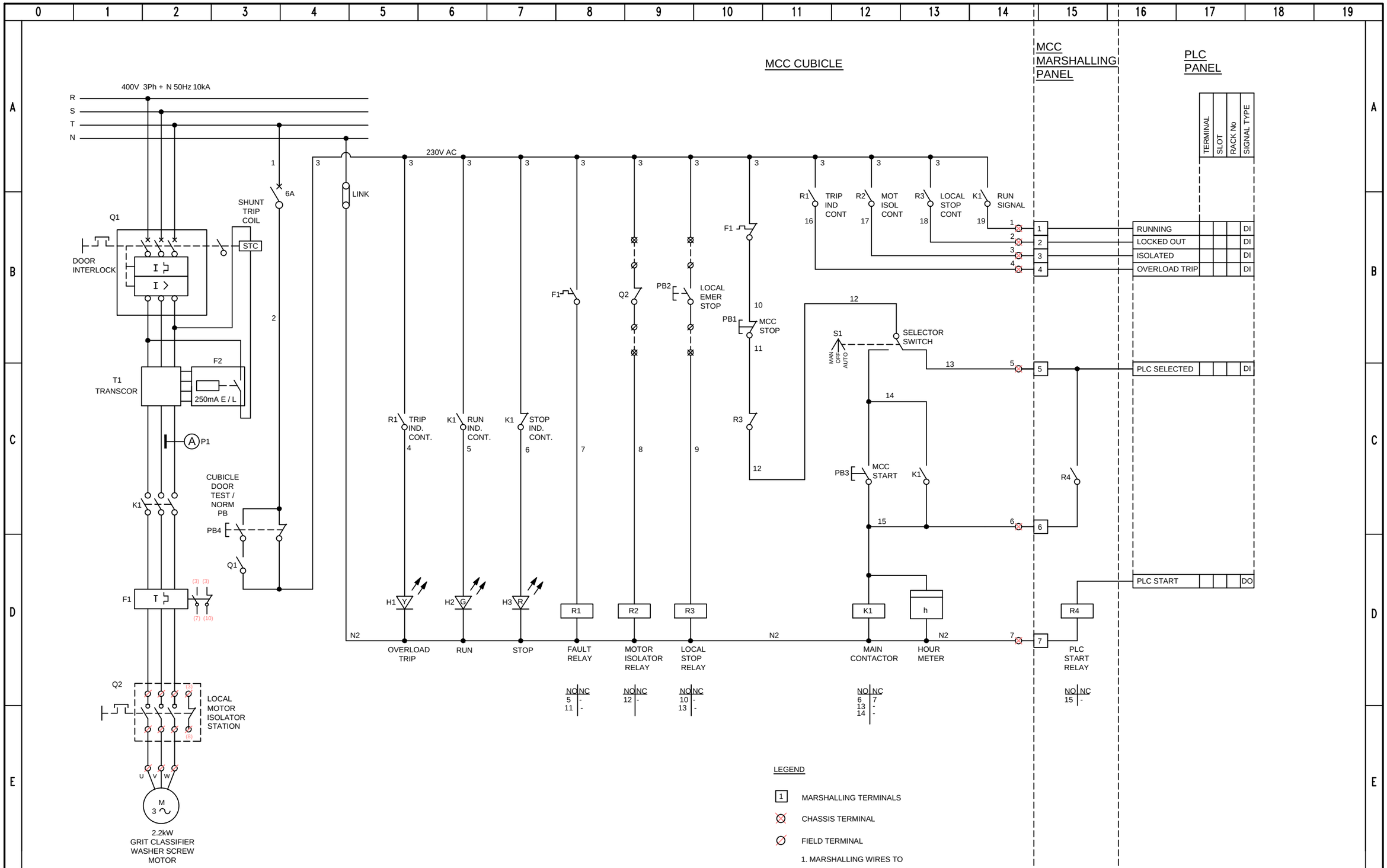

DEPARTMENT	APPROVED	DESIGNATION	DATE

CONSULTING ENGINEERS

ZITHOLELE CONSULTING

ZITHOLELE
P.O. BOX 6002
HALFWAY HOUSE
1685
TEL. 011-254 4800
FAX. 011-805 2100
EMAIL mail@zitholele.co.za

SURVEYED	
DESIGNED	DMcD
DRAWN	DMcD
CHECKED	
SERVICES CHECKED	
GEOTECHNICAL INVESTIGATION	
SERVITUDES	

APPROVED: DMcD
Pr. Eng. No: 200270017.
DATE: AUGUST 2021

JOHANNESBURG WATER (PTY) LTD

Johannesburg Water

17 HARRISON STREET
MARSHALLTOWN
2107

TEL: (011) 688-1400
FAX: (011) 688-1529

CITY OF JOHANNESBURG

BUSHKOPPIE WASTEWATER TREATMENT WORKS

INFRASTRUCTURE RENEWAL PLAN
HOW MODULE 1 TYPICAL 2.2kW GRIT CLASSIFIER WASHER SCREW
DOL STARTER DRIVE SCHEMATIC

DESIGN MANAGER

DATE: AUG 21

SCALE: NTS

T00	AMENDMENTS	APPROVED	DATE
	ISSUED FOR TENDER	DMcD	AUG 21

DRAWING No.
JW NUMBER
CONSULTANT'S NUMBER 18056-73-12-114
FILE No 18056
T 0 0

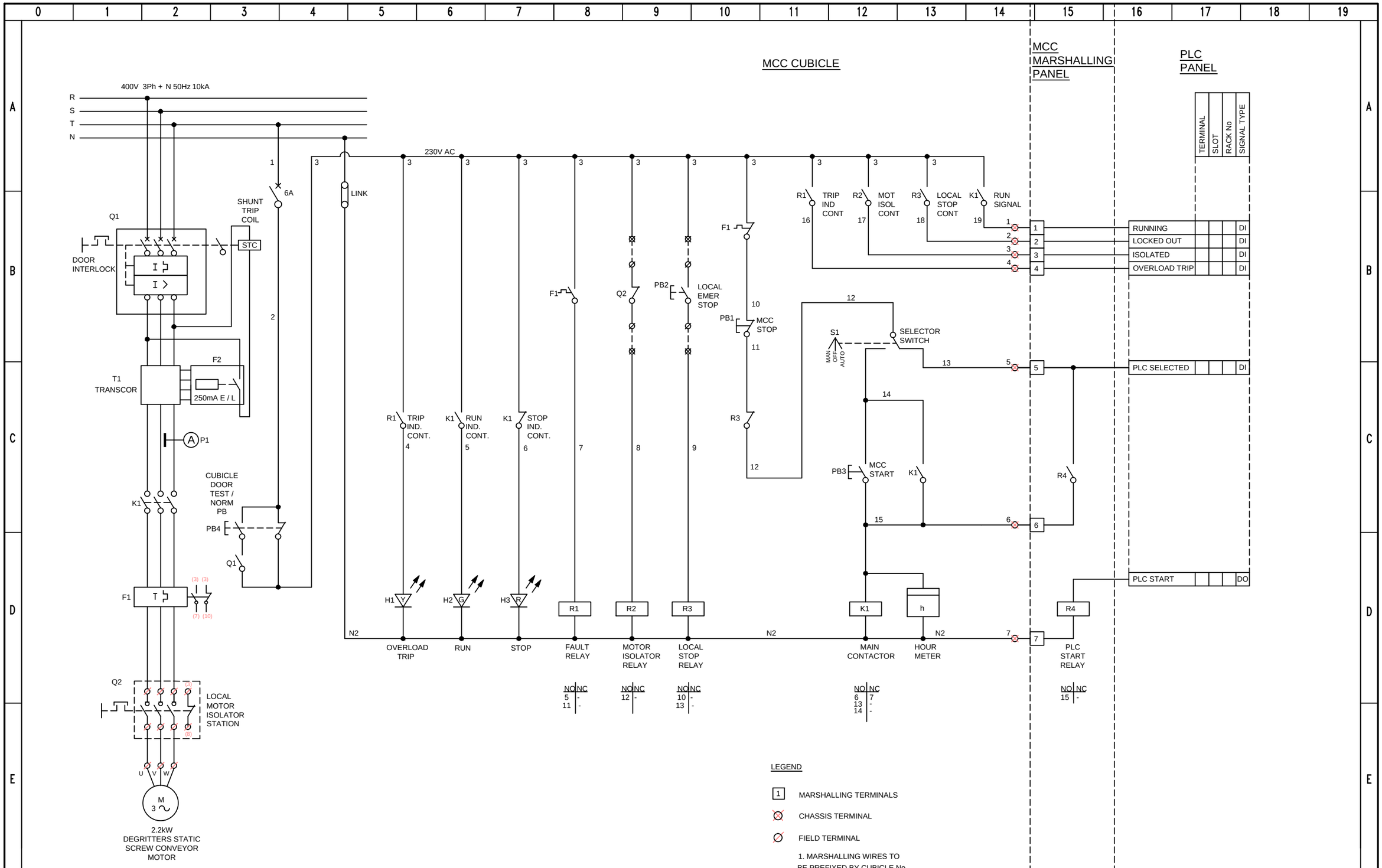

DEPARTMENT	APPROVED	DESIGNATION	DATE

CONSULTING ENGINEERS

ZITHOLELE CONSULTING

ZITHOLELE
P.O. BOX 6002
HALFWAY HOUSE
1685
TEL. 011-254 4800
FAX. 011-805 2100
EMAIL mail@zitholele.co.za

SURVEYED	
DESIGNED	DMcD
DRAWN	DMcD
CHECKED	
SERVICES CHECKED	
GEOTECHNICAL INVESTIGATION	
SERVITUDES	

APPROVED: DMcD
Pr. Eng. No: 200270017.
DATE: AUGUST 2021

JOHANNESBURG WATER (PTY) LTD

Johannesburg Water

17 HARRISON STREET
MARSHALLTOWN
2107

TEL: (011) 688-1400
FAX: (011) 688-1529

CITY OF JOHANNESBURG

BUSHKOPPIE WASTEWATER TREATMENT WORKS

INFRASTRUCTURE RENEWAL PLAN
HOW MODULE 1 TYPICAL 2.2kW DEGRITTERS STATIC SCREW CONVEYOR
DOL STARTER DRIVE SCHEMATIC

DESIGN MANAGER

DATE: AUG 21

SCALE: NTS

T00	AMENDMENTS	APPROVED	DATE
	ISSUED FOR TENDER	DMcD	AUG 21

DRAWING No.
JW NUMBER
CONSULTANT'S NUMBER 18056-73-12-115
FILE No 18056
T 0 0

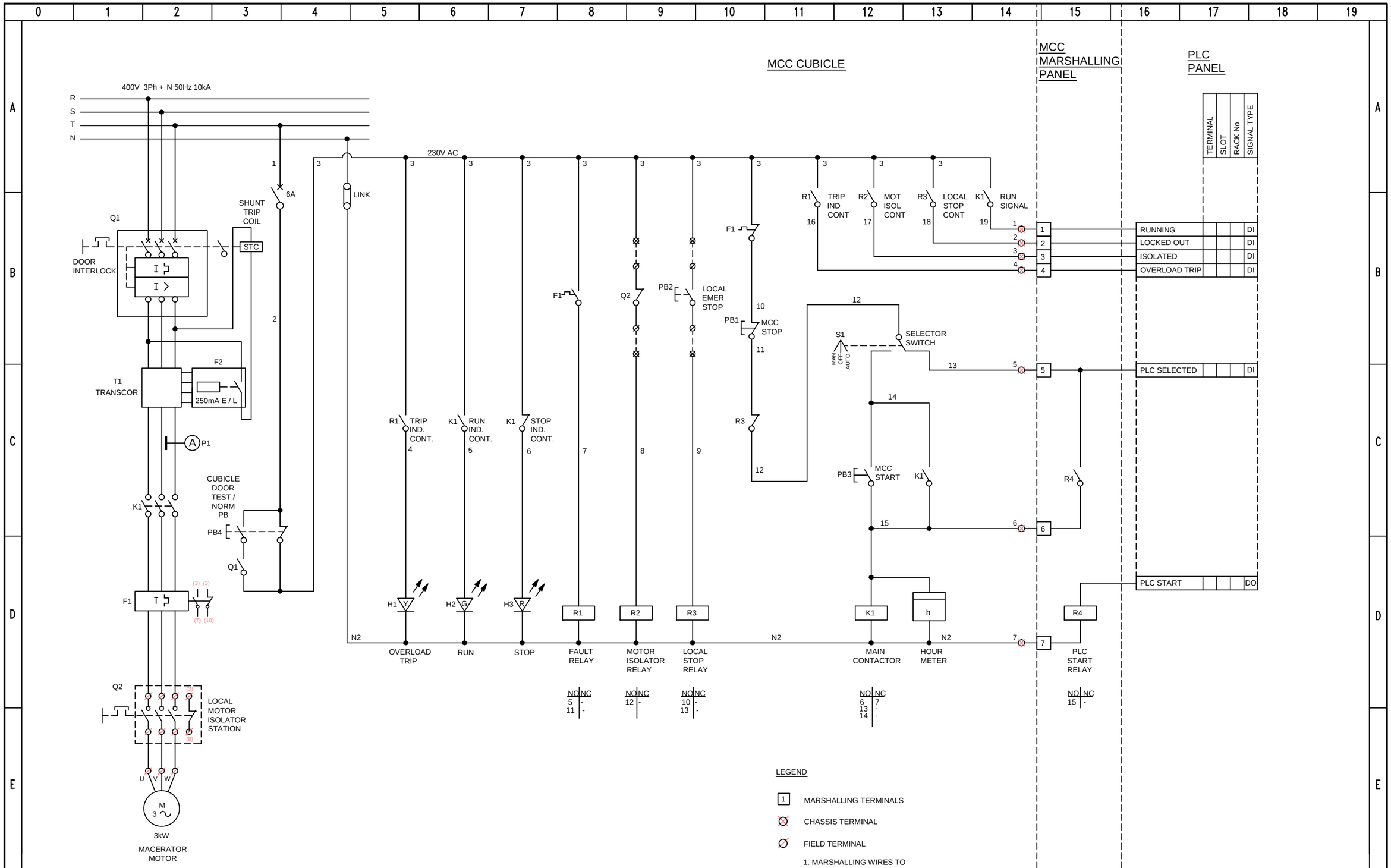

DEPARTMENT	APPROVED	DESIGNATION	DATE

CONSULTING ENGINEERS

ZITHOLELE CONSULTING

ZITHOLELE
P.O. BOX 6002
HALFWAY HOUSE
1685
TEL. 011-254 4800
FAX. 011-805 2100
EMAIL mail@zitholele.co.za

SURVEYED	
DESIGNED	DMcD
DRAWN	DMcD
CHECKED	
SERVICES CHECKED	
GEOTECHNICAL INVESTIGATION	
SERVITUDES	

APPROVED: DMcD
Pr. Eng. No: 200270017.
DATE: AUGUST 2021

JOHANNESBURG WATER (PTY) LTD

Johannesburg Water

17 HARRISON STREET
MARSHALLTOWN
2107

TEL: (011) 688-1400
FAX: (011) 688-1529

CITY OF JOHANNESBURG

BUSHKOPPIE WASTEWATER TREATMENT WORKS

INFRASTRUCTURE RENEWAL PLAN
HOW TYPICAL 3kW MACERATOR
DOL STARTER DRIVE SCHEMATIC

DESIGN MANAGER

DATE: AUG 21

SCALE: NTS

AMENDMENTS		APPROVED	DATE
T00	ISSUED FOR TENDER	DMcD	AUG 21
T01	ISSUED FOR TENDER	DMcD	MAR 24

DRAWING No.
JW NUMBER
CONSULTANT'S NUMBER 18056–73–12–116
FILE No 18056
T 0 1

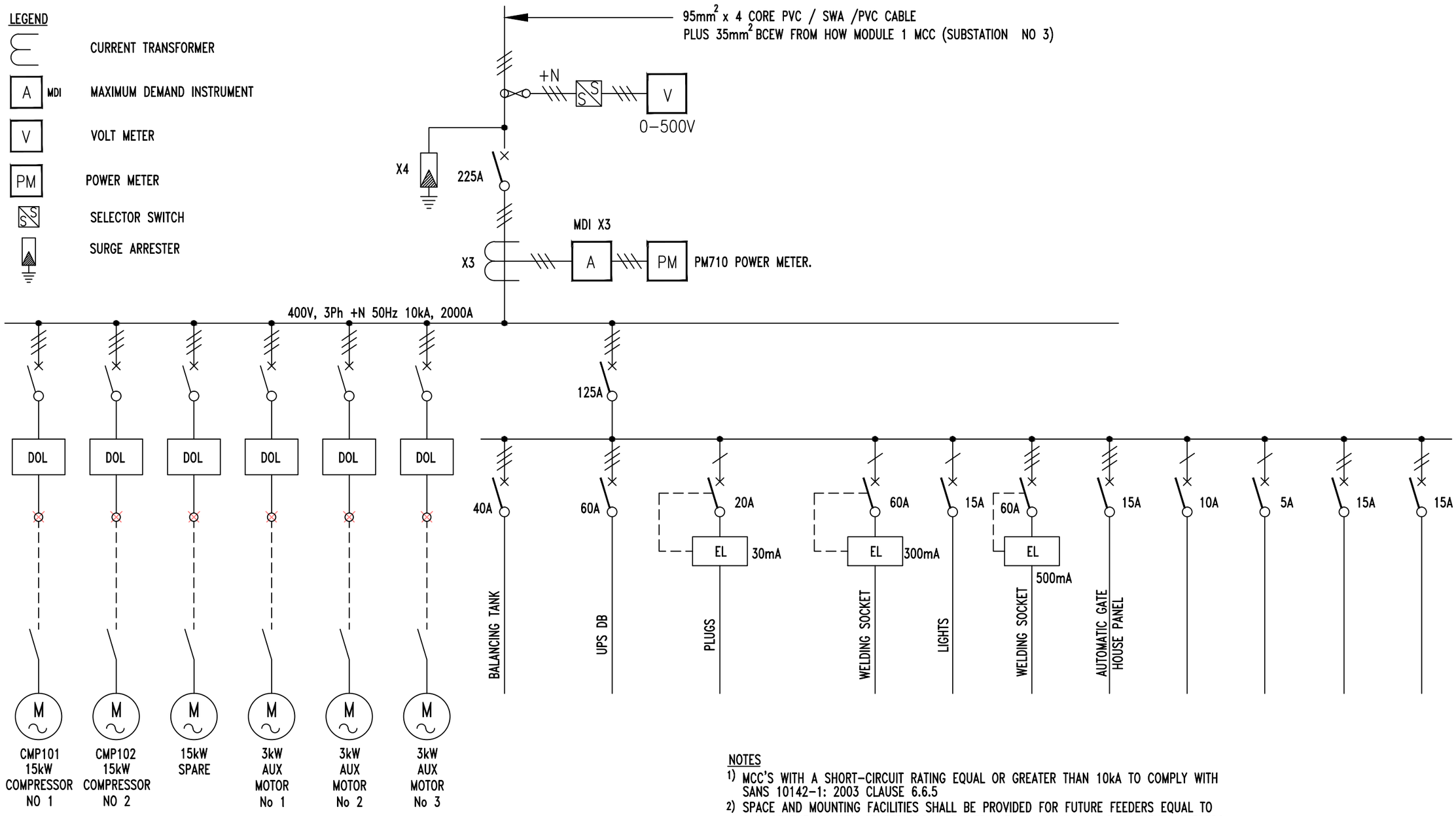

NOTES

1) MCC'S WITH A SHORT-CIRCUIT RATING EQUAL OR GREATER THAN 10kA TO COMPLY WITH SANS 10142-1: 2003 CLAUSE 6.6.5
2) SPACE AND MOUNTING FACILITIES SHALL BE PROVIDED FOR FUTURE FEEDERS EQUAL TO 20% OF THE NUMBER OF FEEDERS INSTALLED WITH A MINIMUM OF TWO FUTURE FEEDERS.
3) THE MCC CONFIGURATION MUST BE FRONT (MCC TO BE EQUIPPED WITH STARTER DRIVES IN THE FRONT).
4) MCC TO BE MANUFACTURED FROM 3CR12

DEPARTMENT	APPROVED	DESIGNATION	DATE

CONSULTING ENGINEERS
ZITHOLELE CONSULTING
ZITHOLELE
P.O. BOX 6002
HALFWAY HOUSE
1685
TEL. 011-254 4800
FAX. 011-805 2100
EMAIL mail@zitholele.co.za

SURVEYED	
DESIGNED	DMcD
DRAWN	DMcD
CHECKED	
SERVICES CHECKED	
GEOTECHNICAL INVESTIGATION	
SERVITUDES	

APPROVED: DMcD
Pr. Eng. No: 200270017.
DATE: AUGUST 2021

JOHANNESBURG WATER (PTY) LTD
Johannesburg Water
17 HARRISON STREET
MARSHALLTOWN
2107
TEL: (011) 688-1400
FAX: (011) 688-1529

CITY OF JOHANNESBURG

BUSHKOPPIE WASTEWATER TREATMENT WORKS

INFRASTRUCTURE RENEWAL PLAN
HOW COMPRESSOR MCC
SINGLE LINE DIAGRAM

DESIGN MANAGER
DATE: AUG 21

SCALE: NTS

AMENDMENTS		APPROVED	DATE
T00	ISSUED FOR TENDER	DMcD	AUG 21
T01	ISSUED FOR TENDER	DMcD	MAR 24

DRAWING No.
JW NUMBER
CONSULTANT'S NUMBER 18056-73-12-117
FILE No 18056
T 0 1

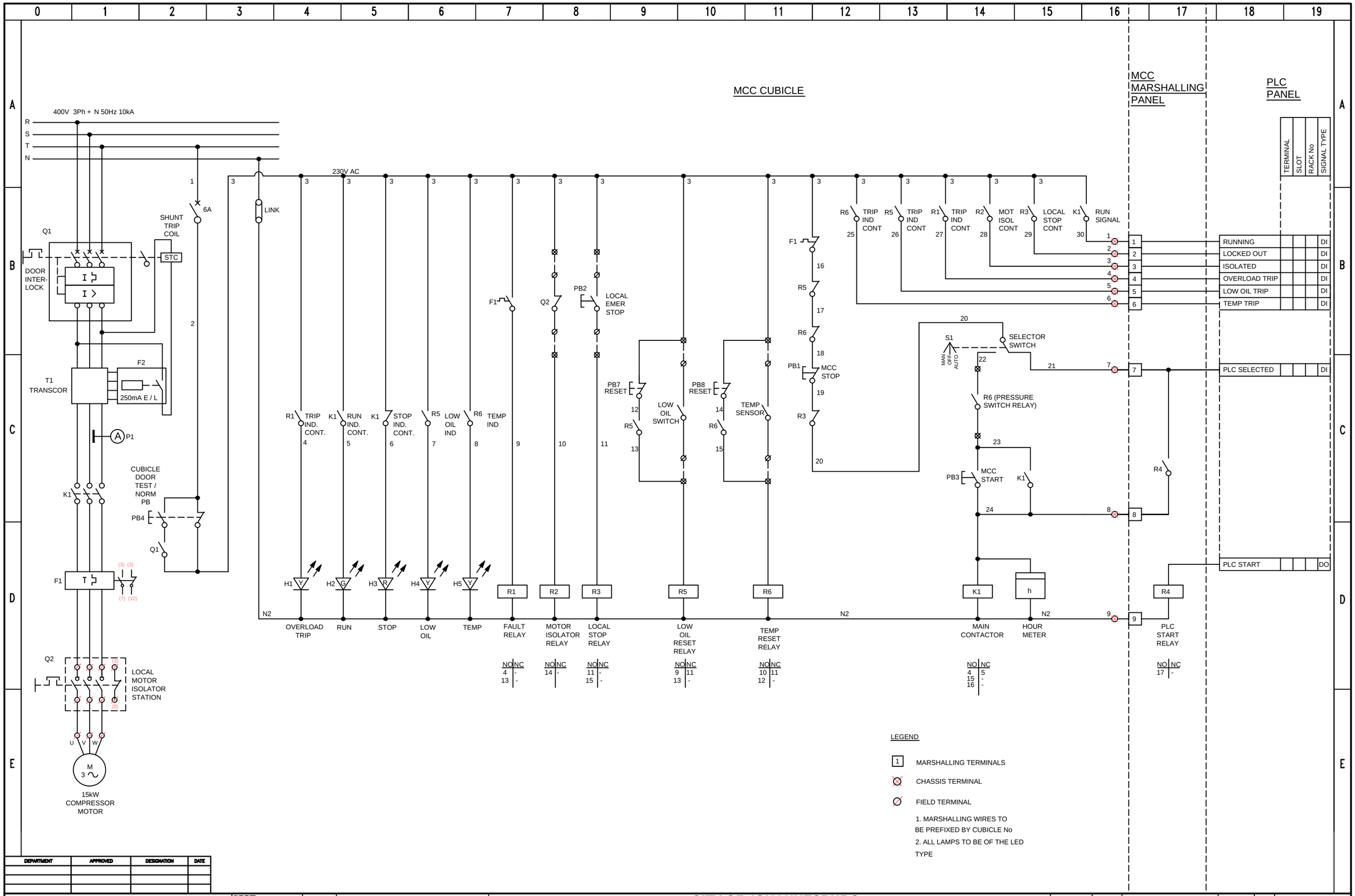

DEPARTMENT	APPROVED	DESIGNATION	DATE

CONSULTING ENGINEERS

ZITHOLELE CONSULTING

ZITHOLELE
P.O. BOX 6002
HALFWAY HOUSE
1685
TEL. 011-254 4800
FAX. 011-805 2100
EMAIL mail@zitholele.co.za

SURVEYED	
DESIGNED	DMcD
DRAWN	DMcD
CHECKED	
SERVICES CHECKED	
GEOTECHNICAL INVESTIGATION	
SERVITUDES	

APPROVED: DMcD
Pr. Eng. No: 200270017.
DATE: AUGUST 2021

JOHANNESBURG WATER (PTY) LTD

Johannesburg Water

17 HARRISON STREET
MARSHALLTOWN
2107

TEL: (011) 688-1400
FAX: (011) 688-1529

CITY OF JOHANNESBURG

BUSHKOPPIE WASTEWATER TREATMENT WORKS

INFRASTRUCTURE RENEWAL PLAN
HOW TYPICAL 15kW COMPRESSOR
DOL STARTER DRIVE SCHEMATIC

DESIGN MANAGER

DATE: AUG 21

SCALE: NTS

AMENDMENTS		APPROVED	DATE
T00	ISSUED FOR TENDER	DMcD	AUG 21

DRAWING No.
JW NUMBER
CONSULTANT'S NUMBER 18056-73-12-118
FILE No 18056
T 0 0

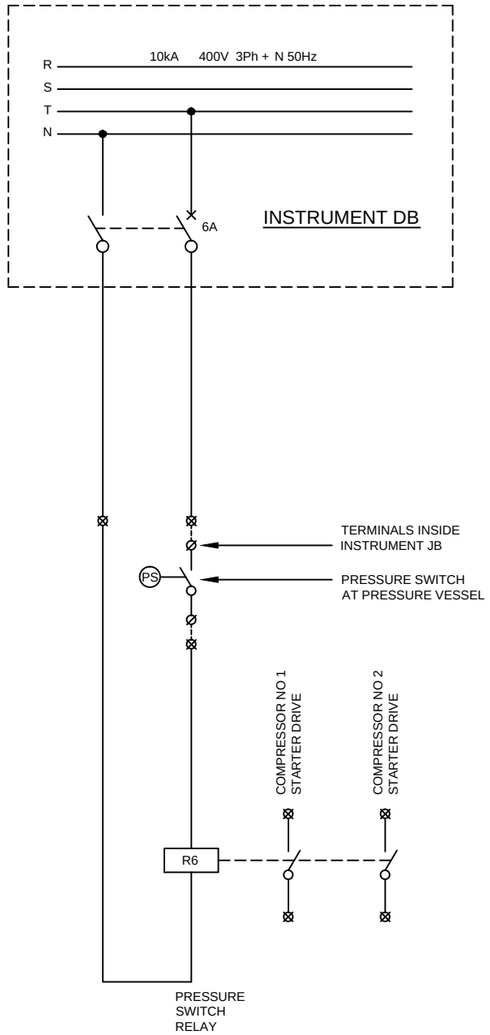

SEPARATE PRESSURE
SWITCH MCC CUBICLE

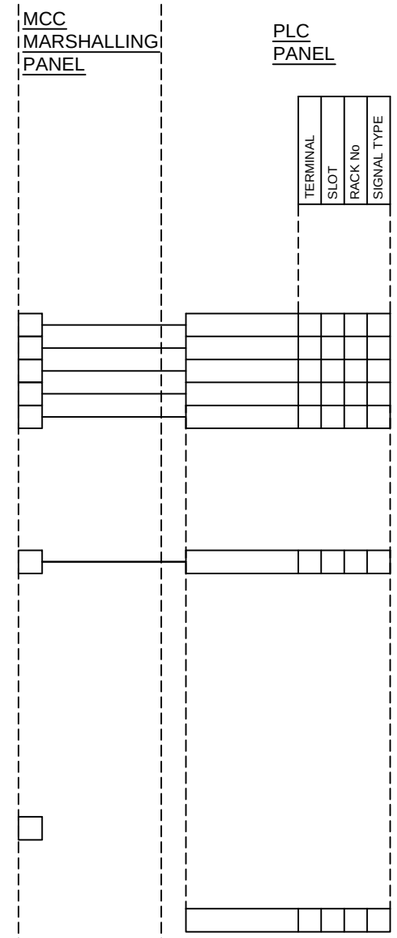

LEGEND

1 MARSHALLING TERMINALS

CHASSIS TERMINAL

FIELD TERMINAL

1. MARSHALLING WIRES TO BE PREFIXED BY CUBICLE No
2. ALL LAMPS TO BE OF THE LED TYPE

DEPARTMENT	APPROVED	DESIGNATION	DATE

CONSULTING ENGINEERS

ZITHOLELE CONSULTING

ZITHOLELE
P.O. BOX 6002
HALFWAY HOUSE
1685
TEL. 011-254 4800
FAX. 011-805 2100
EMAIL mail@zitholele.co.za

SURVEYED	
DESIGNED	DMcD
DRAWN	DMcD
CHECKED	
SERVICES CHECKED	
GEOTECHNICAL INVESTIGATION	
SERVITUDES	

APPROVED: DMcD
Pr. Eng. No: 200270017.
DATE: AUGUST 2021

JOHANNESBURG WATER (PTY) LTD

Johannesburg Water

17 HARRISON STREET
MARSHALLTOWN
2107

TEL: (011) 688-1400
FAX: (011) 688-1529

CITY OF JOHANNESBURG

BUSHKOPPIE WASTEWATER TREATMENT WORKS

INFRASTRUCTURE RENEWAL PLAN
HOW COMPRESSOR PRESSURE
SWITCH SCHEMATIC

DESIGN MANAGER

DATE: AUG 21

SCALE: NTS

AMENDMENTS		APPROVED	DATE
T00	ISSUED FOR TENDER	DMcD	AUG 21

DRAWING No.

JW NUMBER

CONSULTANT'S NUMBER 18056-73-12-119

FILE No 18056

T 0 0

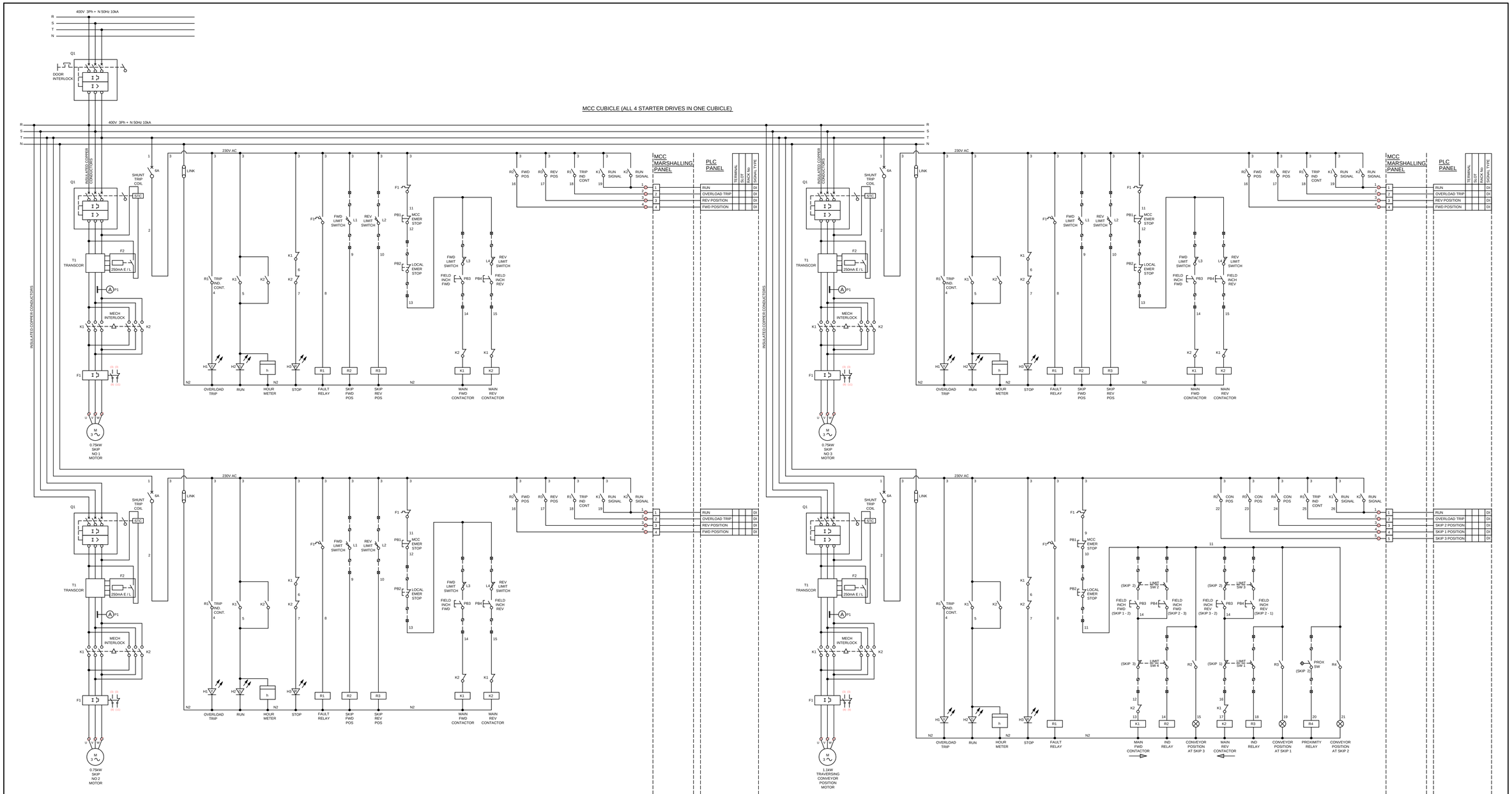

DEPARTMENT	APPROVED	DESIGNATION	DATE

CONSULTING ENGINEERS

ZITHOLELE CONSULTING

ZITHOLELE
P.O. BOX 6002
HALFWAY HOUSE
1685
TEL. 011-254 4800
FAX. 011-805 2100
EMAIL mail@zitholele.co.za

SURVEYED	
DESIGNED	DMcD
DRAWN	DMcD
CHECKED	
SERVICES CHECKED	
GEOTECHNICAL INVESTIGATION	
SERVITUDES	

APPROVED: DMcD
Pr. Eng. No: 200270017.
DATE: AUGUST 2021

JOHANNESBURG WATER (PTY) LTD

Johannesburg Water

17 HARRISON STREET
MARSHALLTOWN
2107

TEL: (011) 688-1400
FAX: (011) 688-1529

CITY OF JOHANNESBURG

BUSHKOPPIE WASTEWATER TREATMENT WORKS

INFRASTRUCTURE RENEWAL PLAN
HOW SKIP WINCH & TRAVERSING CONVEYOR POSITION
DOL STARTER DRIVES SCHEMATIC

DESIGN MANAGER

DATE: AUG 21

SCALE: NTS

AMENDMENTS		APPROVED	DATE
T00	ISSUED FOR TENDER	DMcD	AUG 21

DRAWING No.
JW NUMBER
CONSULTANT'S NUMBER 18056-73-12-120
FILE No 18056
T 0 0

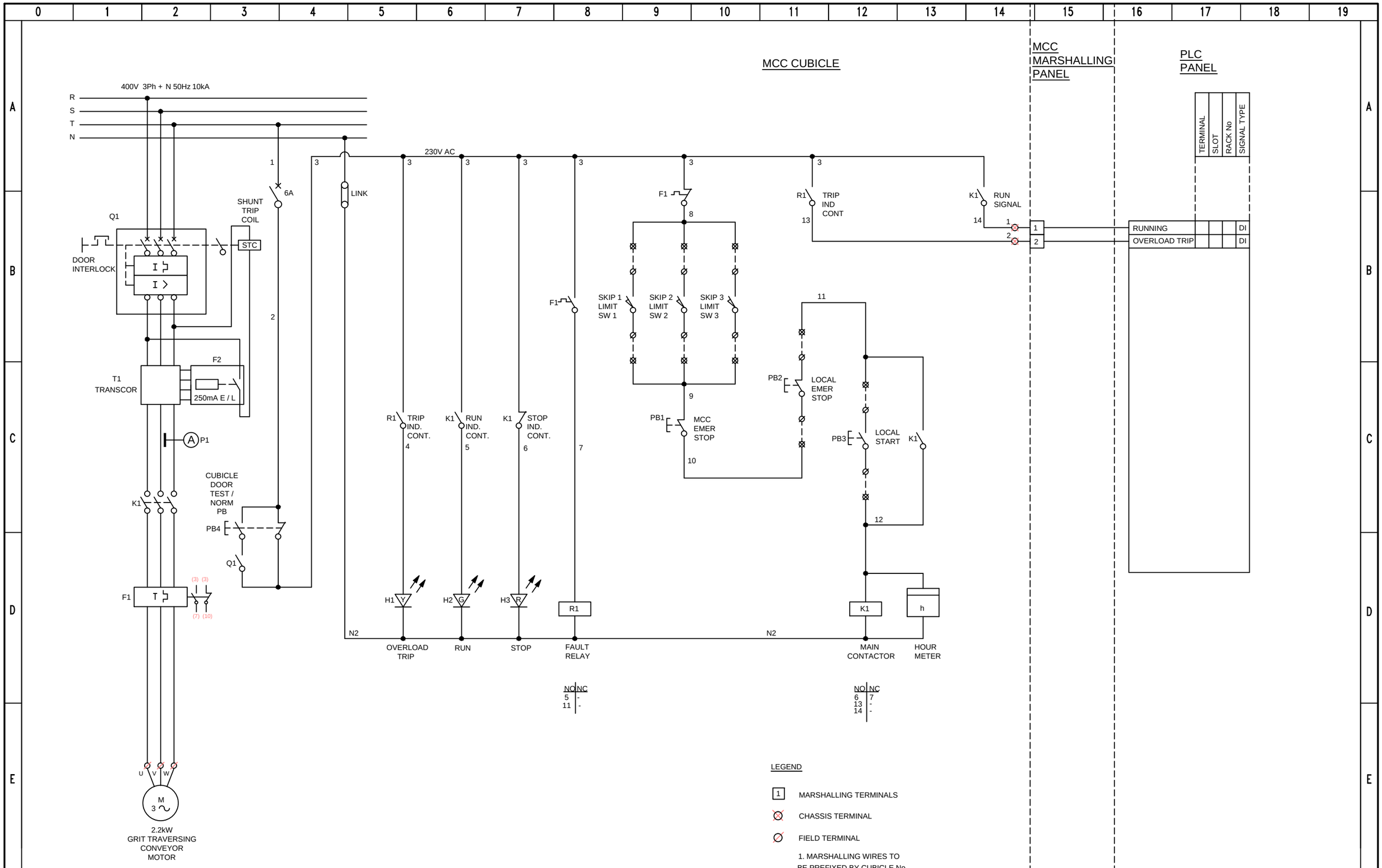

DEPARTMENT	APPROVED	DESIGNATION	DATE

CONSULTING ENGINEERS

ZITHOLELE CONSULTING

ZITHOLELE
P.O. BOX 6002
HALFWAY HOUSE
1685
TEL. 011-254 4800
FAX. 011-805 2100
EMAIL mail@zitholele.co.za

SURVEYED	
DESIGNED	DMcD
DRAWN	DMcD
CHECKED	
SERVICES CHECKED	
GEOTECHNICAL INVESTIGATION	
SERVITUDES	

APPROVED: DMcD
Pr. Eng. No: 200270017.
DATE: AUGUST 2021

JOHANNESBURG WATER (PTY) LTD

Johannesburg Water

17 HARRISON STREET
MARSHALLTOWN
2107

TEL: (011) 688-1400
FAX: (011) 688-1529

CITY OF JOHANNESBURG

BUSHKOPPIE WASTEWATER TREATMENT WORKS

INFRASTRUCTURE RENEWAL PLAN
HOW MODULE TWO 2.2kW TRAVERSING CONVEYOR
DOL STARTER DRIVE SCHEMATIC

DESIGN MANAGER

DATE: AUG 21

SCALE: NTS

T00	AMENDMENTS	APPROVED	DATE
	ISSUED FOR TENDER	DMcD	AUG 21

DRAWING No.
JW NUMBER
CONSULTANT'S NUMBER 18056-73-12-121
FILE No 18056
T 0 0

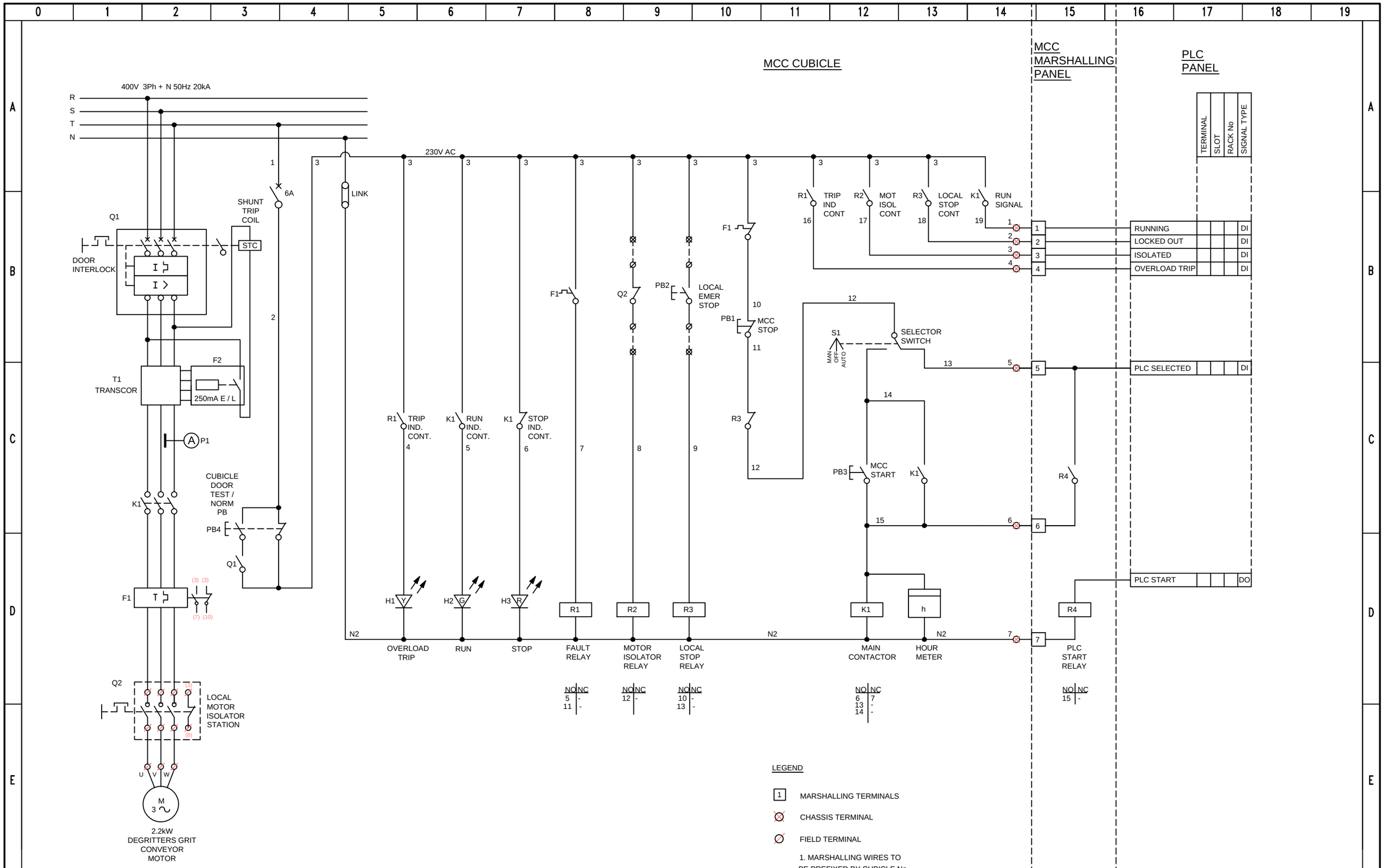

DEPARTMENT	APPROVED	DESIGNATION	DATE

CONSULTING ENGINEERS

ZITHOLELE CONSULTING

ZITHOLELE
P.O. BOX 6002
HALFWAY HOUSE
1685
TEL. 011-254 4800
FAX. 011-805 2100
EMAIL mail@zitholele.co.za

SURVEYED	
DESIGNED	DMcD
DRAWN	DMcD
CHECKED	
SERVICES CHECKED	
GEOTECHNICAL INVESTIGATION	
SERVITUDES	

APPROVED: DMcD
Pr. Eng. No: 200270017.
DATE: AUGUST 2021

JOHANNESBURG WATER (PTY) LTD

Johannesburg Water

17 HARRISON STREET
MARSHALLTOWN
2107

TEL: (011) 688-1400
FAX: (011) 688-1529

CITY OF JOHANNESBURG

BUSHKOPPIE WASTEWATER TREATMENT WORKS

INFRASTRUCTURE RENEWAL PLAN
HOW MODULE 2 TYPICAL 2.2kW DEGRITTERS GRIT CONVEYOR
DOL STARTER DRIVE SCHEMATIC

DESIGN MANAGER

DATE: AUG 21

SCALE: NTS

	AMENDMENTS	APPROVED	DATE
T00	ISSUED FOR TENDER	DMcD	AUG 21
T01	ISSUED FOR TENDER	DMcD	MAR 24

DRAWING No.
JW NUMBER
CONSULTANT'S NUMBER 18056-73-12-122
FILE No 18056
T 0 1

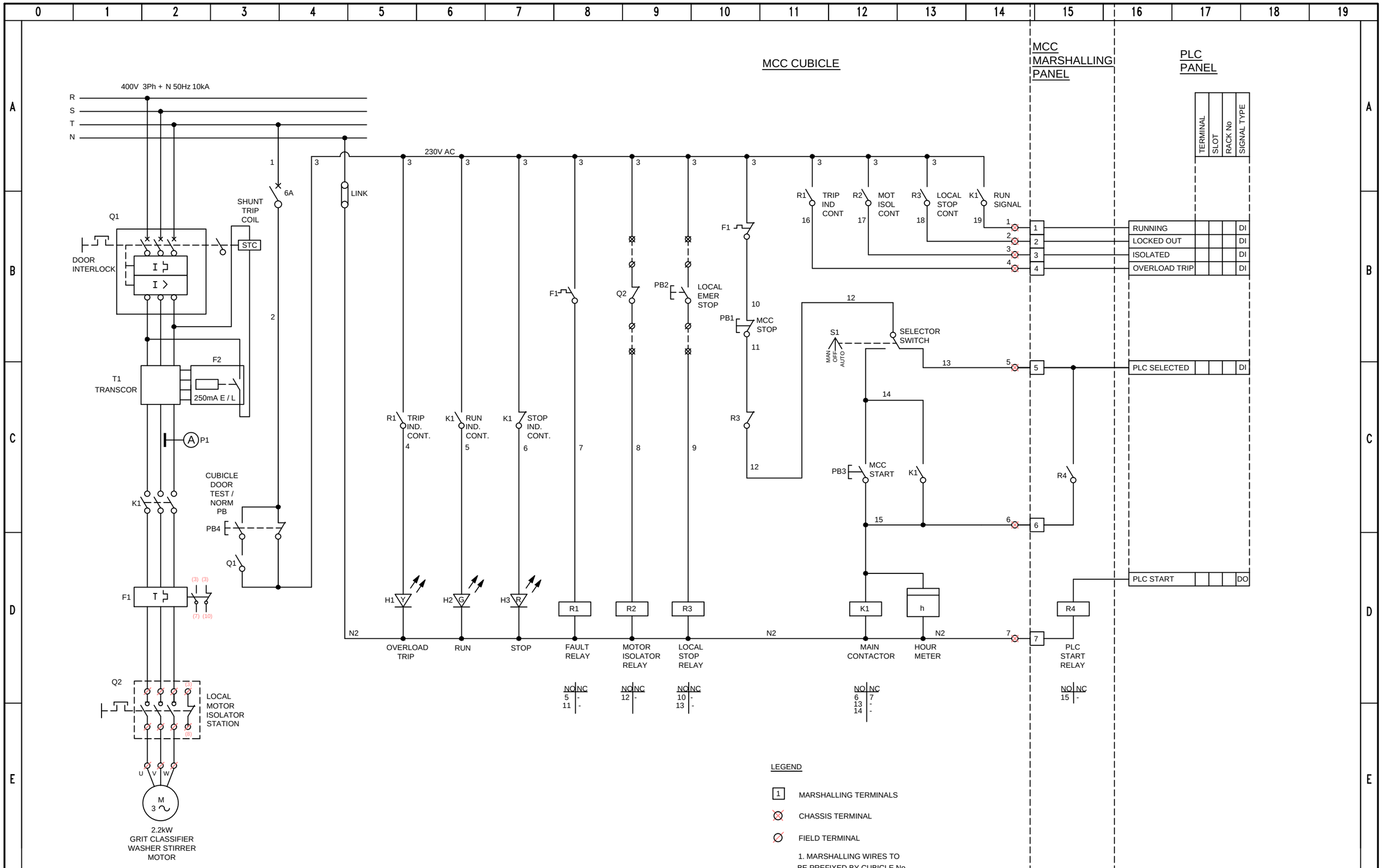

DEPARTMENT	APPROVED	DESIGNATION	DATE

CONSULTING ENGINEERS

ZITHOLELE CONSULTING

ZITHOLELE
P.O. BOX 6002
HALFWAY HOUSE
1685
TEL. 011-254 4800
FAX. 011-805 2100
EMAIL mail@zitholele.co.za

SURVEYED	
DESIGNED	DMcD
DRAWN	DMcD
CHECKED	
SERVICES CHECKED	
GEOTECHNICAL INVESTIGATION	
SERVITUDES	

APPROVED: DMcD
Pr. Eng. No: 200270017.
DATE: AUGUST 2021

JOHANNESBURG WATER (PTY) LTD

Johannesburg Water

17 HARRISON STREET
MARSHALLTOWN
2107

TEL: (011) 688-1400
FAX: (011) 688-1529

CITY OF JOHANNESBURG

BUSHKOPPIE WASTEWATER TREATMENT WORKS

INFRASTRUCTURE RENEWAL PLAN
HOW MODULE 2 TYPICAL 2.2kW GRIT CLASSIFIER WASHER STIRRER
DOL STARTER DRIVE SCHEMATIC

DESIGN MANAGER

DATE: AUG 21

SCALE: NTS

T00	AMENDMENTS	APPROVED	DATE
	ISSUED FOR TENDER	DMcD	AUG 21

DRAWING No.
JW NUMBER
CONSULTANT'S NUMBER 18056-73-12-123
FILE No 18056
T 0 0

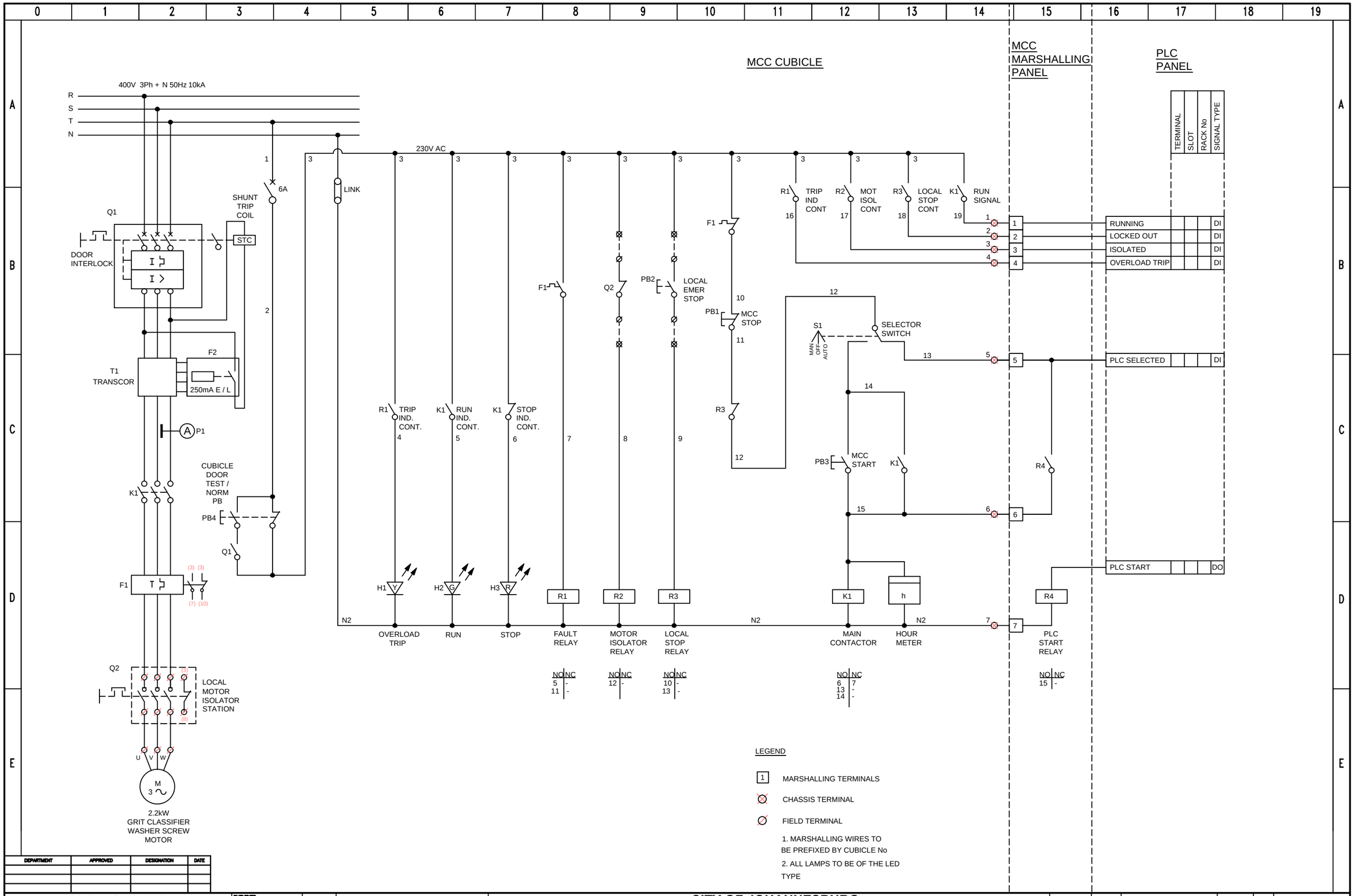

DEPARTMENT	APPROVED	DESIGNATION	DATE

CONSULTING ENGINEERS

ZITHOLELE CONSULTING

ZITHOLELE
P.O. BOX 6002
HALFWAY HOUSE
1685
TEL. 011-254 4800
FAX. 011-805 2100
EMAIL mail@zitholele.co.za

SURVEYED	
DESIGNED	DMcD
DRAWN	DMcD
CHECKED	
SERVICES CHECKED	
GEOTECHNICAL INVESTIGATION	
SERVITUDES	

APPROVED: DMcD
Pr. Eng. No: 200270017.
DATE: AUGUST 2021

JOHANNESBURG WATER (PTY) LTD

Johannesburg Water

17 HARRISON STREET
MARSHALLTOWN
2107

TEL: (011) 688-1400
FAX: (011) 688-1529

CITY OF JOHANNESBURG

BUSHKOPPIE WASTEWATER TREATMENT WORKS

INFRASTRUCTURE RENEWAL PLAN
HOW MODULE 2 TYPICAL 2.2kW GRIT CLASSIFIER WASHER SCREW
DOL STARTER DRIVE SCHEMATIC

DESIGN MANAGER

DATE: AUG 21

SCALE: NTS

T00	AMENDMENTS	APPROVED	DATE
	ISSUED FOR TENDER	DMcD	AUG 21

DRAWING No.
JW NUMBER
CONSULTANT'S NUMBER 18056-73-12-124
FILE No 18056
T 0 0

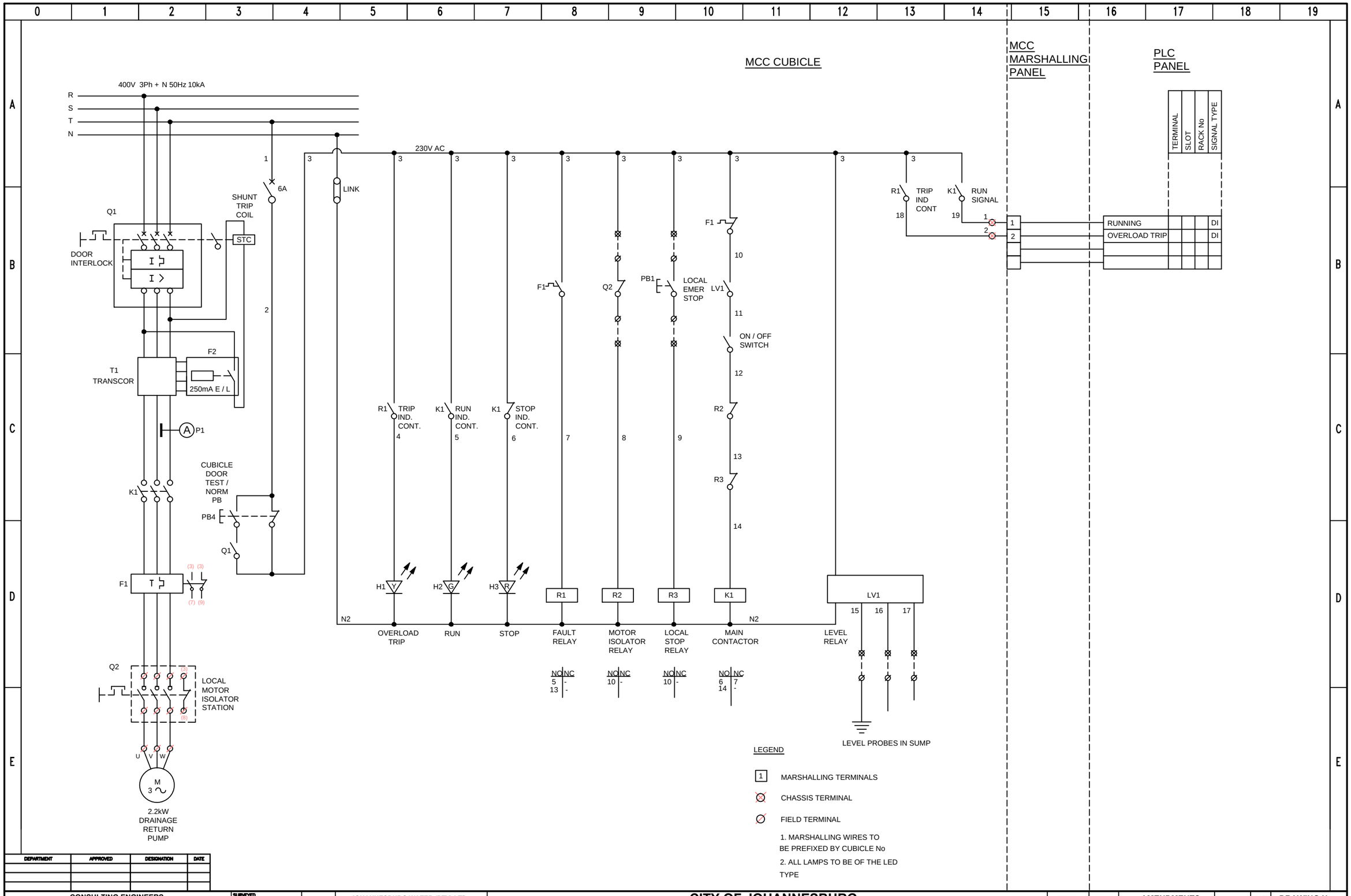

DEPARTMENT	APPROVED	DESIGNATION	DATE

CONSULTING ENGINEERS

ZITHOLELE CONSULTING

ZITHOLELE
P.O. BOX 6002
HALFWAY HOUSE
1685
TEL. 011-254 4800
FAX. 011-805 2100
EMAIL mail@zitholele.co.za

SURVEYED	
DESIGNED	DMcD
DRAWN	DMcD
CHECKED	
SERVICES CHECKED	
GEOTECHNICAL INVESTIGATION	
SERMTUDES	

APPROVED: DMcD
Pr. Eng. No: 200270017.
DATE: AUGUST 2021

JOHANNESBURG WATER (PTY) LTD

Johannesburg Water

17 HARRISON STREET
MARSHALLTOWN
2107

TEL: (011) 688-1400
FAX: (011) 688-1529

CITY OF JOHANNESBURG

BUSHKOPPIE WASTEWATER TREATMENT WORKS

INFRASTRUCTURE RENEWAL PLAN
HOW MODULE TWO 2.2kW DEGRITTERS DRAINAGE RETURN PUMP
STARTER DRIVE SCHEMATIC

DESIGN MANAGER

DATE: AUG 21

SCALE: NTS

AMENDMENTS	APPROVED	DATE
T00 ISSUED FOR TENDER	DMcD	AUG 21

DRAWING No.
JW NUMBER
CONSULTANT'S NUMBER 18056-73-12-125
FILE No 18056
T 0 0

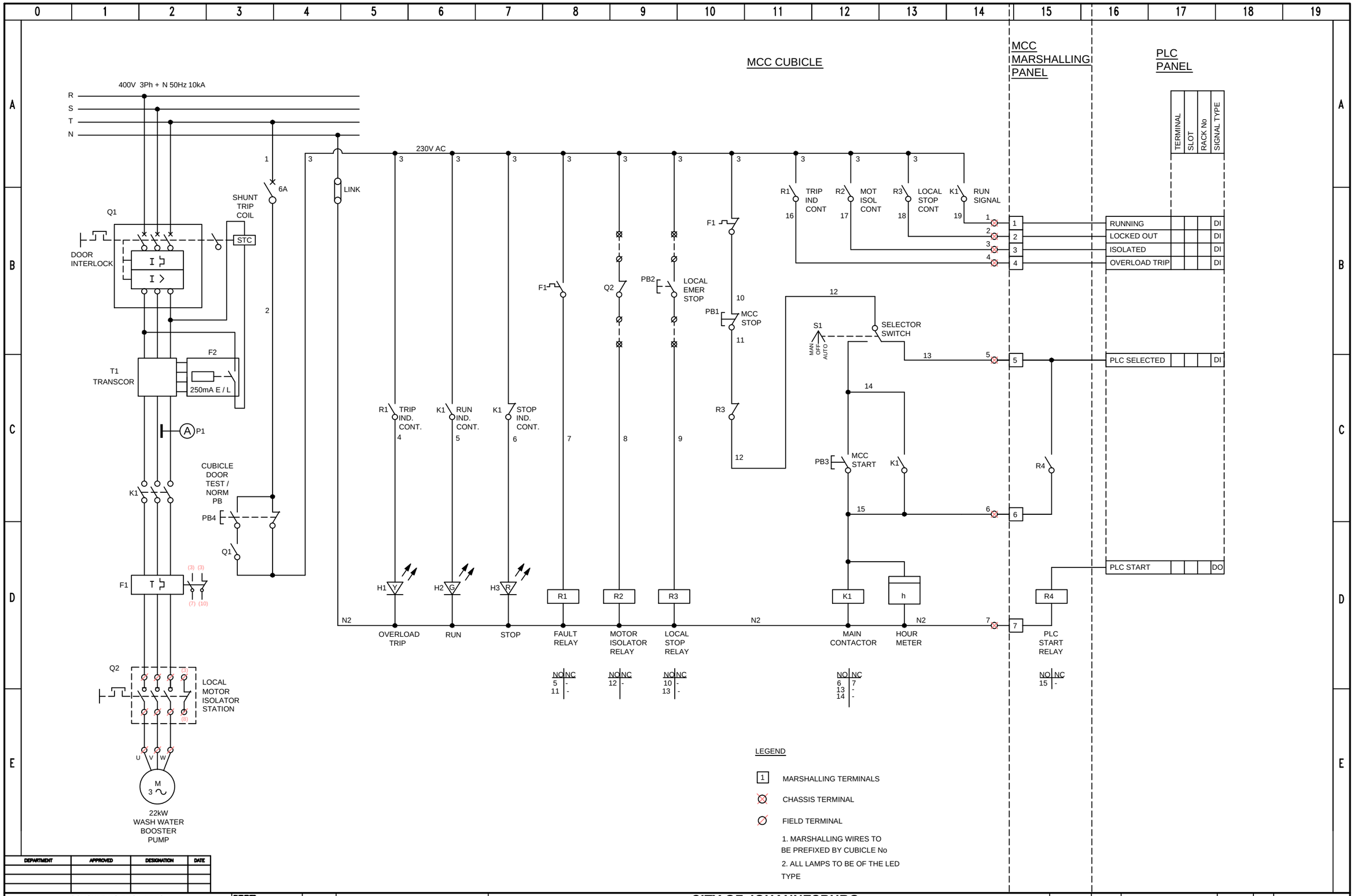

DEPARTMENT	APPROVED	DESIGNATION	DATE

CONSULTING ENGINEERS

ZITHOLELE CONSULTING

ZITHOLELE
P.O. BOX 6002
HALFWAY HOUSE
1685
TEL. 011-254 4800
FAX. 011-805 2100
EMAIL mail@zitholele.co.za

SURVEYED	
DESIGNED	DMcD
DRAWN	DMcD
CHECKED	
SERVICES CHECKED	
GEOTECHNICAL INVESTIGATION	
SERVITUDES	

APPROVED: DMcD
Pr. Eng. No: 200270017.
DATE: AUGUST 2021

JOHANNESBURG WATER (PTY) LTD

Johannesburg Water

17 HARRISON STREET
MARSHALLTOWN
2107

TEL: (011) 688-1400
FAX: (011) 688-1529

CITY OF JOHANNESBURG

BUSHKOPPIE WASTEWATER TREATMENT WORKS

INFRASTRUCTURE RENEWAL PLAN
HOW MODULE 2 TYPICAL 22kW WASH WATER BOOSTER PUMP
DOL STARTER DRIVE SCHEMATIC

DESIGN MANAGER

DATE: AUG 21

SCALE: NTS

AMENDMENTS		APPROVED	DATE
T00	ISSUED FOR TENDER	DMcD	AUG 21

DRAWING No.
JW NUMBER
CONSULTANT'S NUMBER 18056-73-12-126
FILE No 18056
T 0 0

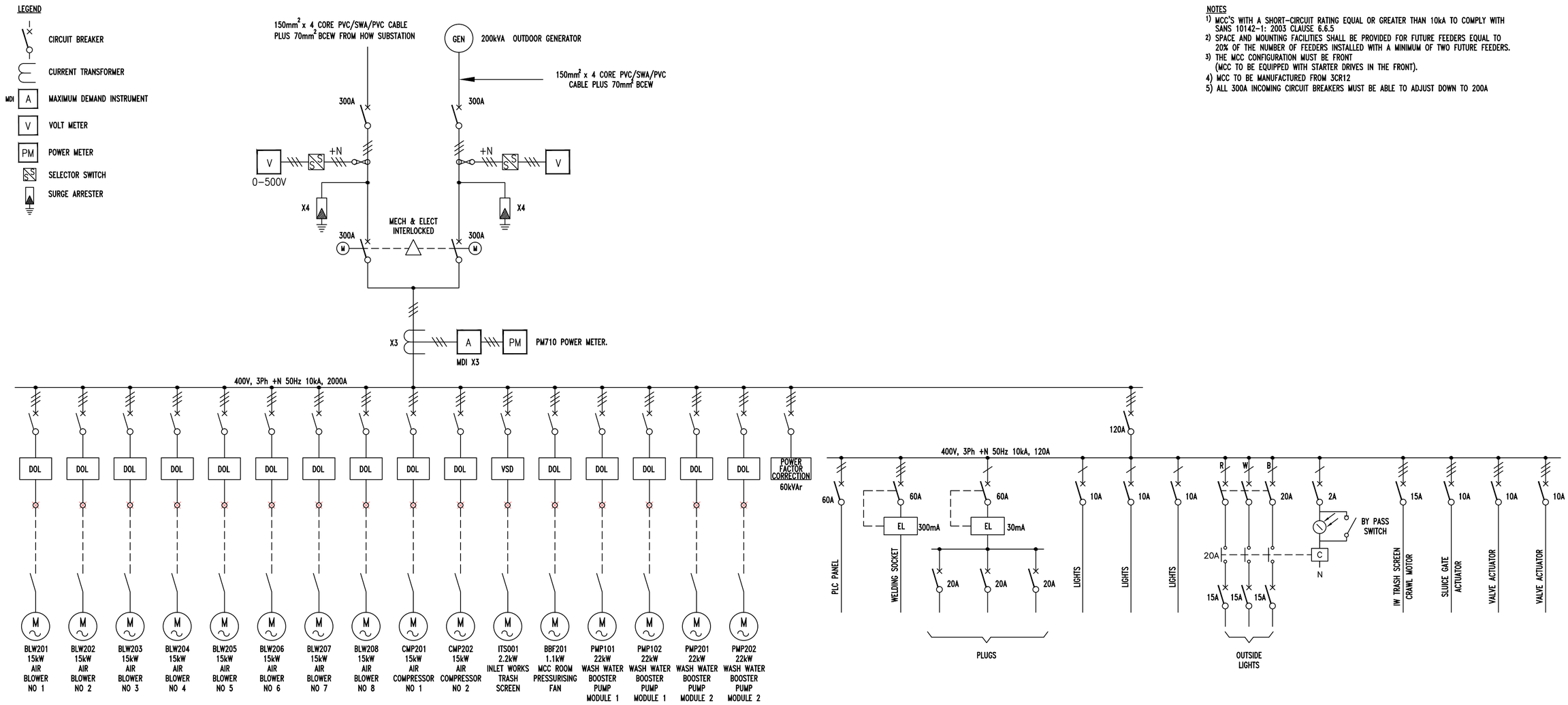

NOTES
1) MCC'S WITH A SHORT-CIRCUIT RATING EQUAL OR GREATER THAN 10kA TO COMPLY WITH SANS 10142-1: 2003 CLAUSE 6.6.5
2) SPACE AND MOUNTING FACILITIES SHALL BE PROVIDED FOR FUTURE FEEDERS EQUAL TO 20% OF THE NUMBER OF FEEDERS INSTALLED WITH A MINIMUM OF TWO FUTURE FEEDERS.
3) THE MCC CONFIGURATION MUST BE FRONT (MCC TO BE EQUIPPED WITH STARTER DRIVES IN THE FRONT).
4) MCC TO BE MANUFACTURED FROM 3CR12
5) ALL 300A INCOMING CIRCUIT BREAKERS MUST BE ABLE TO ADJUST DOWN TO 200A

DEPARTMENT	APPROVED	DESIGNATION	DATE

CONSULTING ENGINEERS
ZITHOLELE CONSULTING
ZITHOLELE
P.O. BOX 6002
HALFWAY HOUSE
1685
TEL. 011-254 4800
FAX. 011-805 2100
EMAIL mail@zitholele.co.za

SURVEYED	
DESIGNED	DMcD
DRAWN	DMcD
CHECKED	
SERVICES CHECKED	
GEOTECHNICAL INVESTIGATION	
SERVITUDES	

APPROVED: DMcD
Pr. Eng. No: 200270017.
DATE: AUGUST 2021

JOHANNESBURG WATER (PTY) LTD
Johannesburg Water
17 HARRISON STREET
MARSHALLTOWN
2107
TEL: (011) 688-1400
FAX: (011) 688-1529

CITY OF JOHANNESBURG

BUSHKOPPIE WASTEWATER TREATMENT WORKS

INFRASTRUCTURE RENEWAL PLAN
HOW NEW BLOWER ROOM MCC
SINGLE LINE DIAGRAM

DESIGN MANAGER
DATE: AUG 21

SCALE: NTS

AMENDMENTS		APPROVED	DATE
T00	ISSUED FOR TENDER	DMcD	AUG 21
T01	ISSUED FOR TENDER	DMcD	MAR 24

DRAWING No.
JW NUMBER
CONSULTANT'S NUMBER 18056-73-12-127
FILE No 18056
T 0 1

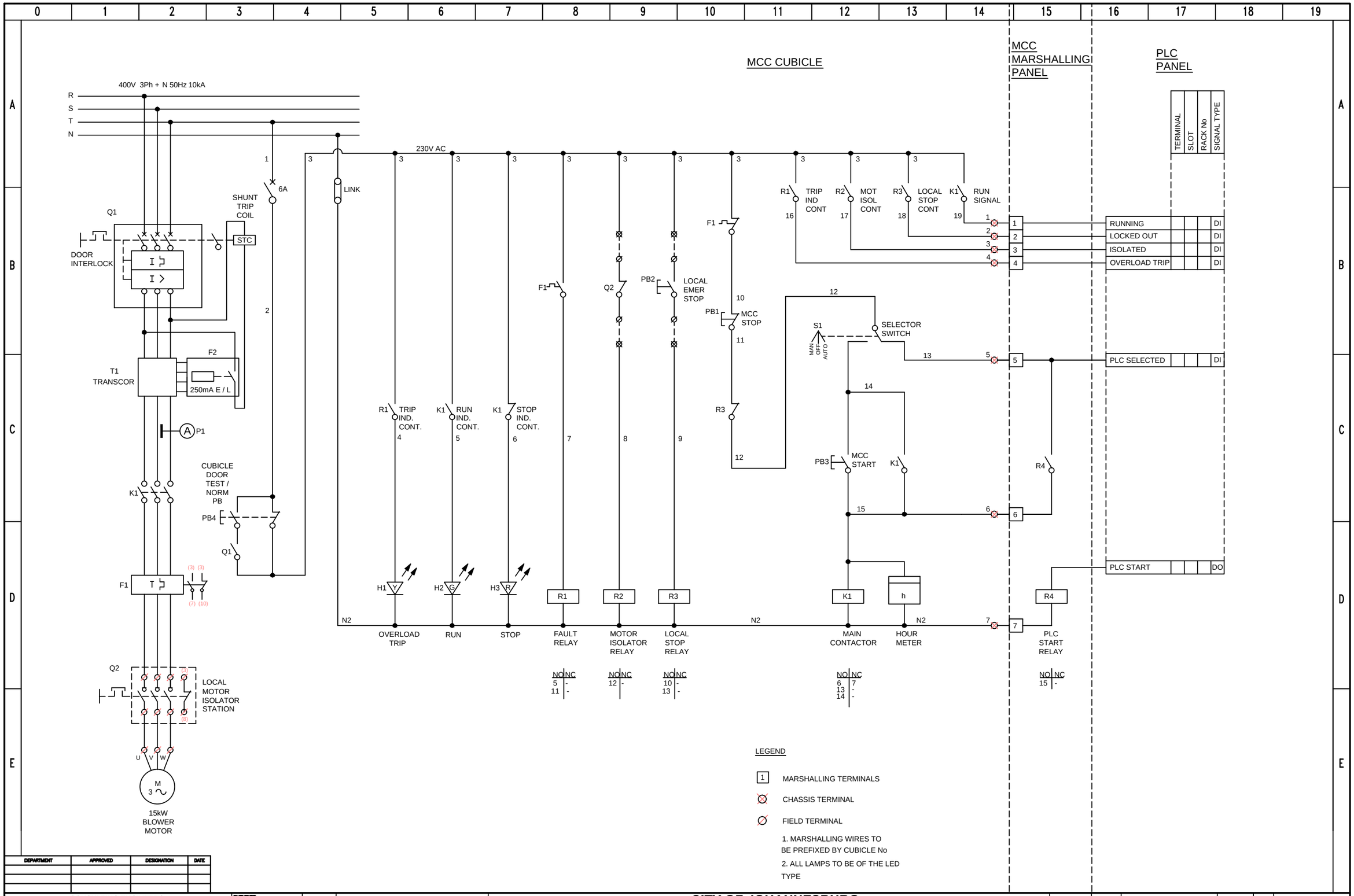

DEPARTMENT	APPROVED	DESIGNATION	DATE

CONSULTING ENGINEERS

ZITHOLELE CONSULTING

ZITHOLELE
P.O. BOX 6002
HALFWAY HOUSE
1685
TEL. 011-254 4800
FAX. 011-805 2100
EMAIL mail@zitholele.co.za

SURVEYED	
DESIGNED	DMcD
DRAWN	DMcD
CHECKED	
SERVICES CHECKED	
GEOTECHNICAL INVESTIGATION	
SERVITUDES	

APPROVED: DMcD
Pr. Eng. No: 200270017.
DATE: AUGUST 2021

JOHANNESBURG WATER (PTY) LTD

Johannesburg Water

17 HARRISON STREET
MARSHALLTOWN
2107

TEL: (011) 688-1400
FAX: (011) 688-1529

CITY OF JOHANNESBURG

BUSHKOPPIE WASTEWATER TREATMENT WORKS

INFRASTRUCTURE RENEWAL PLAN
HOW NEW BLOWER ROOM TYPICAL 15kW AIR BLOWER
DOL STARTER DRIVE SCHEMATIC

DESIGN MANAGER

DATE: AUG 21

SCALE: NTS

	AMENDMENTS	APPROVED	DATE
T00	ISSUED FOR TENDER	DMcD	AUG 21

DRAWING No.
JW NUMBER
CONSULTANT'S NUMBER 18056-73-12-128
FILE No 18056
T 0 0

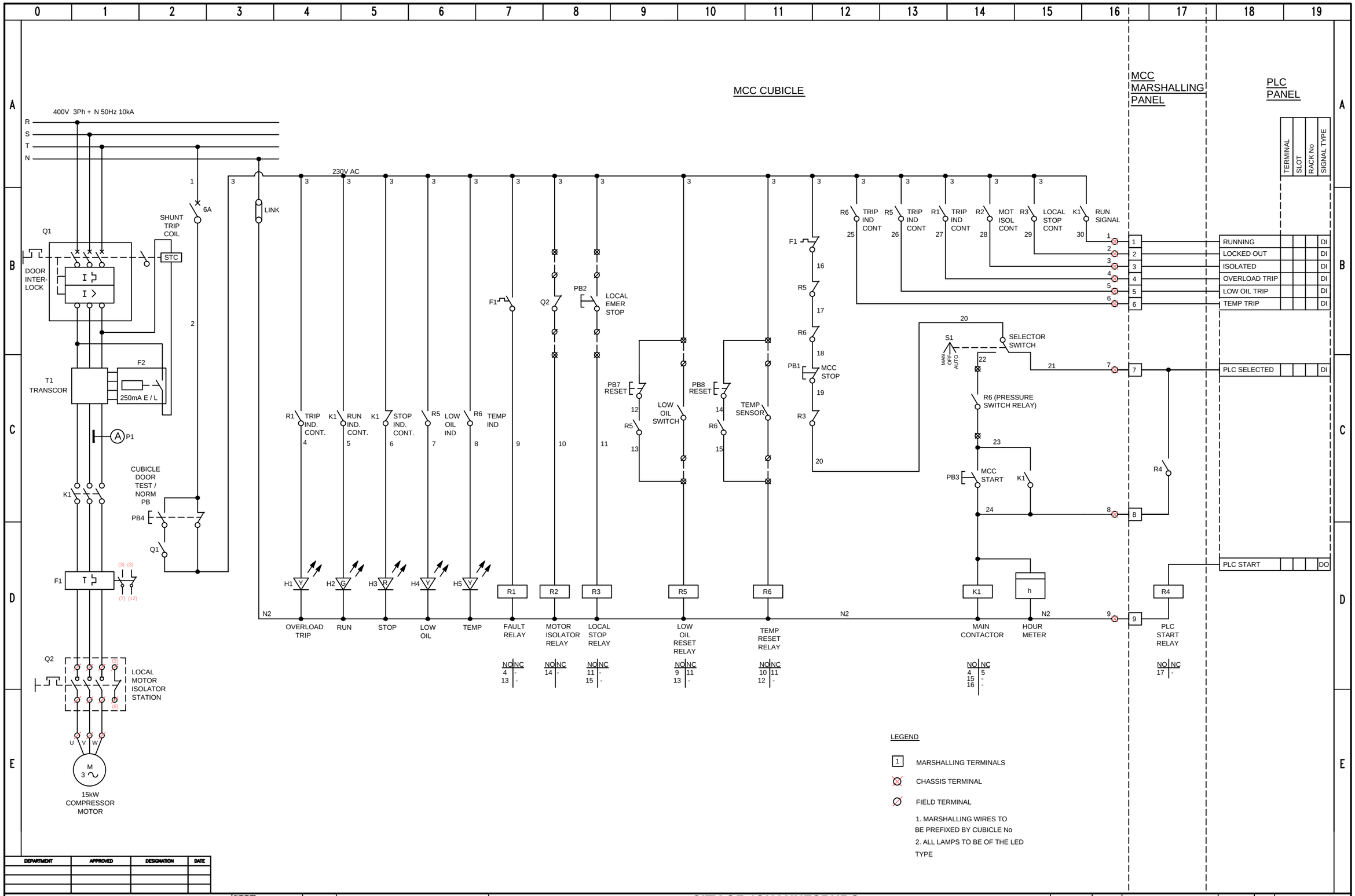

DEPARTMENT	APPROVED	DESIGNATION	DATE

CONSULTING ENGINEERS

ZITHOLELE CONSULTING

ZITHOLELE
P.O. BOX 6002
HALFWAY HOUSE
1685
TEL. 011-254 4800
FAX. 011-805 2100
EMAIL mail@zitholele.co.za

SURVEYED	
DESIGNED	DMcD
DRAWN	DMcD
CHECKED	
SERVICES CHECKED	
GEOTECHNICAL INVESTIGATION	
SERVITUDES	

APPROVED: DMcD
Pr. Eng. No: 200270017.
DATE: AUGUST 2021

JOHANNESBURG WATER (PTY) LTD

Johannesburg Water

17 HARRISON STREET
MARSHALLTOWN
2107

TEL: (011) 688-1400
FAX: (011) 688-1529

CITY OF JOHANNESBURG

BUSHKOPPIE WASTEWATER TREATMENT WORKS

INFRASTRUCTURE RENEWAL PLAN
HOW NEW BLOWER ROOM TYPICAL 15kW COMPRESSOR
DOL STARTER DRIVE SCHEMATIC

DESIGN MANAGER

DATE: AUG 21

SCALE: NTS

AMENDMENTS		APPROVED	DATE
T00	ISSUED FOR TENDER	DMcD	AUG 21

DRAWING No.
JW NUMBER
CONSULTANT'S NUMBER 18056-73-12-129
FILE No 18056
T 0 0

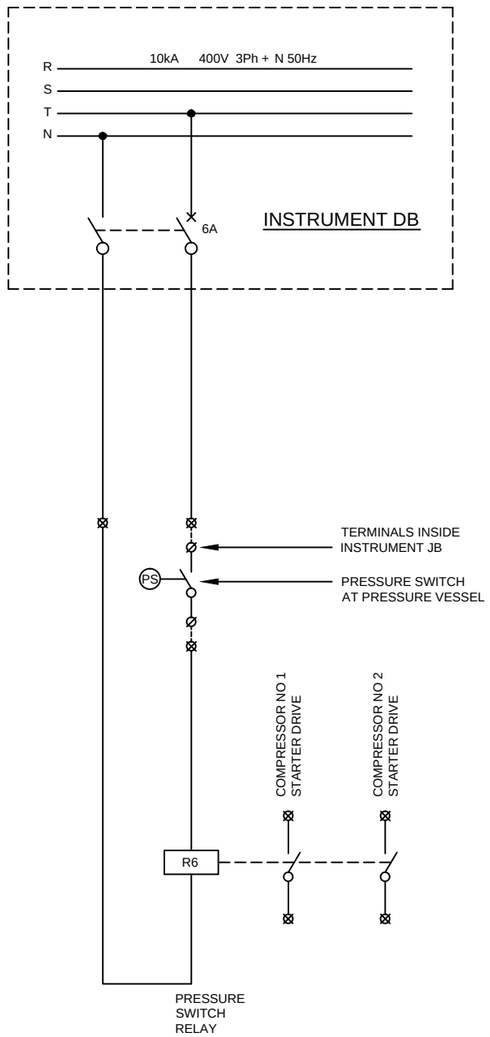

SEPARATE PRESSURE
SWITCH MCC CUBICLE

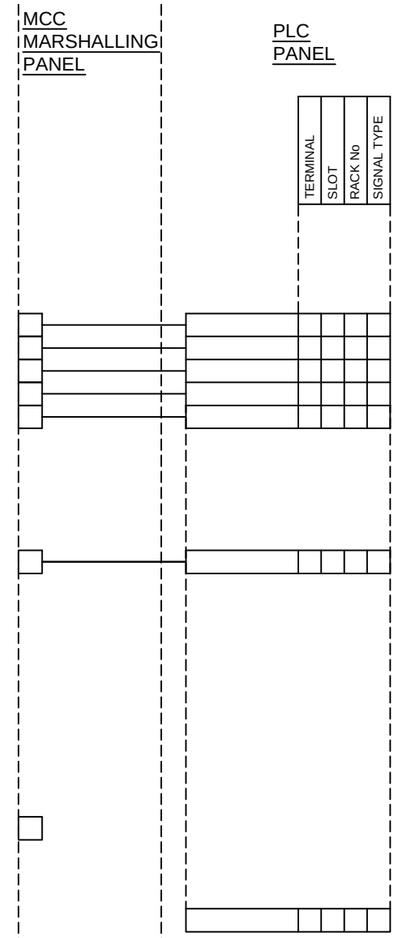

LEGEND

1 MARSHALLING TERMINALS

CHASSIS TERMINAL

FIELD TERMINAL

1. MARSHALLING WIRES TO BE PREFIXED BY CUBICLE No
2. ALL LAMPS TO BE OF THE LED TYPE

DEPARTMENT	APPROVED	DESIGNATION	DATE

CONSULTING ENGINEERS

ZITHOLELE CONSULTING

ZITHOLELE
P.O. BOX 6002
HALFWAY HOUSE
1685
TEL. 011-254 4800
FAX. 011-805 2100
EMAIL mail@zitholele.co.za

SURVEYED	
DESIGNED	DMcD
DRAWN	DMcD
CHECKED	
SERVICES CHECKED	
GEOTECHNICAL INVESTIGATION	
SERVITUDES	

APPROVED: DMcD
Pr. Eng. No: 200270017.
DATE: AUGUST 2021

JOHANNESBURG WATER (PTY) LTD

Johannesburg Water

17 HARRISON STREET
MARSHALLTOWN
2107

TEL: (011) 688-1400
FAX: (011) 688-1529

CITY OF JOHANNESBURG

BUSHKOPPIE WASTEWATER TREATMENT WORKS

INFRASTRUCTURE RENEWAL PLAN
HOW NEW BLOWER ROOM COMPRESSOR PRESSURE
SWITCH SCHEMATIC

DESIGN MANAGER

DATE: AUG 21

SCALE: NTS

AMENDMENTS		APPROVED	DATE
T00	ISSUED FOR TENDER	DMcD	AUG 21

DRAWING No.

JW NUMBER

CONSULTANT'S NUMBER 18056-73-12-130

FILE No 18056

T 0 0

NOTE:
THE CURRENT RELAY THAT IS INDICATED ON THIS DRAWING IS NOT A THERMAL OVERLOAD RELAY. IN THE EVENT OF AN OVERLOAD THE POWER SUPPLY WILL TRIP QUICKER IF CONNECTED TO A CURRENT RELAY COMPARED TO A THERMAL OVERLOAD RELAY.
THE INSTALLATION / CONNECTION OF A CURRENT RELAY IS IMPERATIVE, OTHERWISE THE TRASH SCREEN MANUFACTURER WILL NOT ACCEPT ANY LIABILITY OF MECHANICAL DAMAGE.

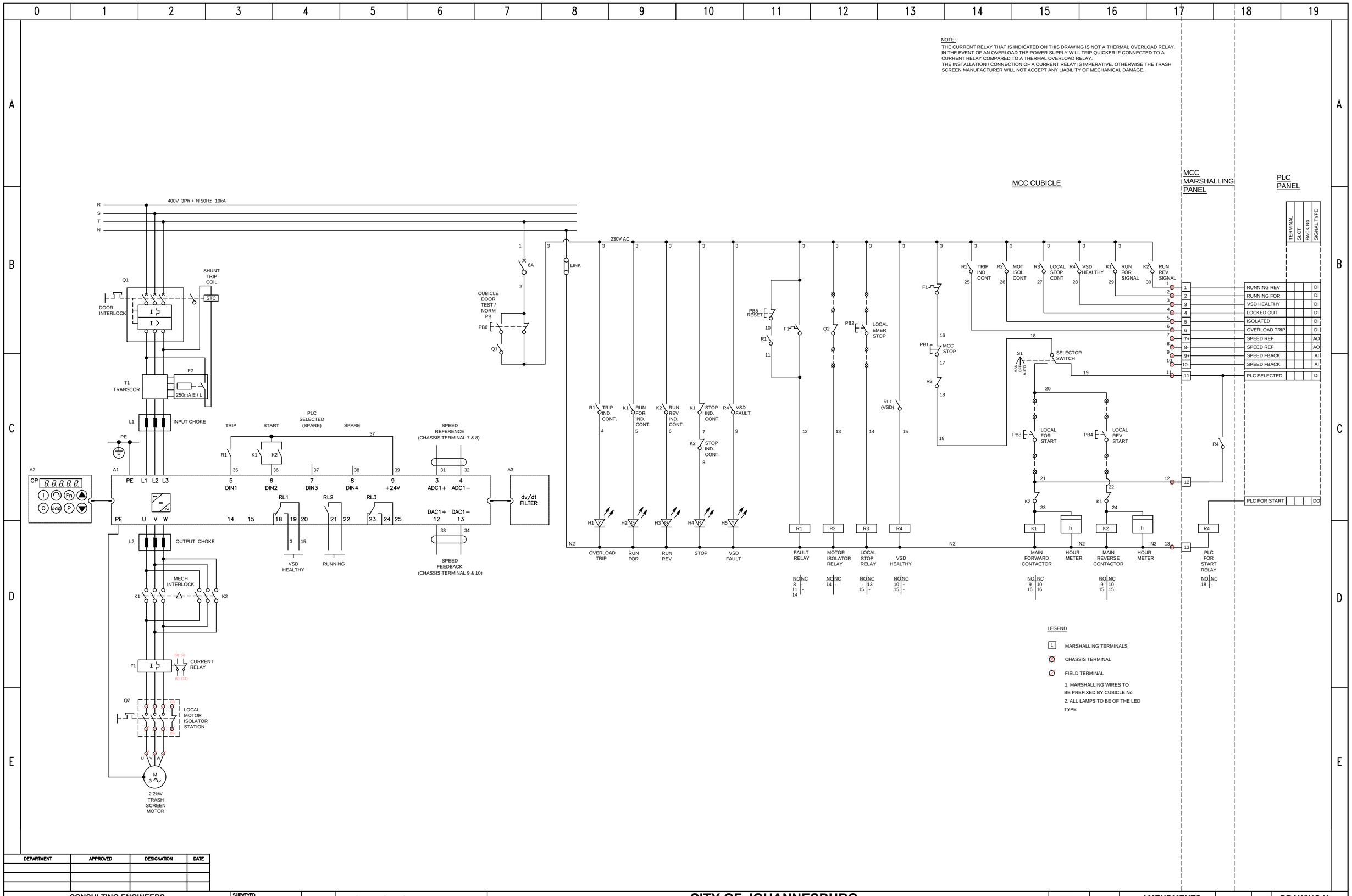

DEPARTMENT	APPROVED	DESIGNATION	DATE

CONSULTING ENGINEERS

ZITHOLELE CONSULTING

ZITHOLELE
P.O. BOX 6002
HALFWAY HOUSE
1685
TEL. 011-254 4800
FAX. 011-805 2100
EMAIL mail@zitholele.co.za

SURVEYED	
DESIGNED	DMcD
DRAWN	DMcD
CHECKED	
SERVICES CHECKED	
GEOTECHNICAL INVESTIGATION	
SERVITUDES	

APPROVED: DMcD
Pr. Eng. No: 200270017.
DATE: AUGUST 2021

JOHANNESBURG WATER (PTY) LTD

Johannesburg Water

17 HARRISON STREET
MARSHALLTOWN
2107

TEL: (011) 688-1400
FAX: (011) 688-1529

CITY OF JOHANNESBURG

BUSHKOPPIE WASTEWATER TREATMENT WORKS

INFRASTRUCTURE RENEWAL PLAN
INLET WORKS 2.2kW TRASH SCREEN
VSD STARTER DRIVE SCHEMATIC

DESIGN MANAGER

DATE: AUG 21

SCALE: NTS

AMENDMENTS		APPROVED	DATE
T00	ISSUED FOR TENDER	DMcD	AUG 21

DRAWING No.
JW NUMBER
CONSULTANT'S NUMBER 18056−73−12−131
FILE No 18056
T 0 0

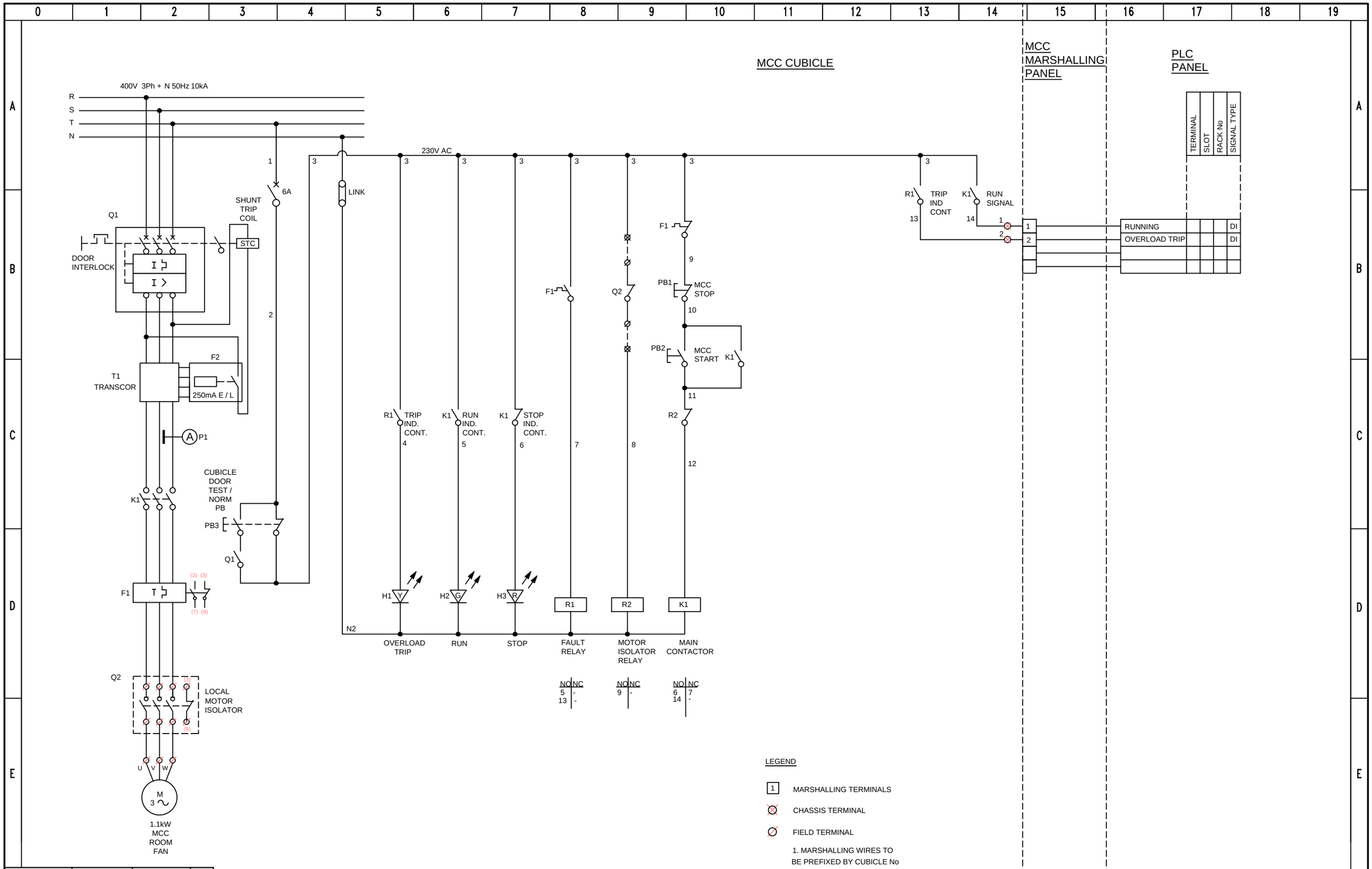

LEGEND

- 1 MARSHALLING TERMINALS
- CHASSIS TERMINAL
- FIELD TERMINAL

1. MARSHALLING WIRES TO BE PREFIXED BY CUBICLE No
2. ALL LAMPS TO BE OF THE LED TYPE

DEPARTMENT	APPROVED	DESIGNATION	DATE

CONSULTING ENGINEERS

ZITHOLELE CONSULTING

ZITHOLELE
P.O. BOX 6002
HALFWAY HOUSE
1685
TEL. 011-254 4800
FAX. 011-805 2100
EMAIL mail@zitholele.co.za

SURVEYED	
DESIGNED	DMcD
DRAWN	DMcD
CHECKED	
SERVICES CHECKED	
GEOTECHNICAL INVESTIGATION	
SERVITUDES	

APPROVED: DMcD
Pr. Eng. No: 200270017.
DATE: AUGUST 2021

JOHANNESBURG WATER (PTY) LTD

Johannesburg Water

17 HARRISON STREET
MARSHALLTOWN
2107

TEL: (011) 688-1400
FAX: (011) 688-1529

CITY OF JOHANNESBURG

BUSHKOPPIE WASTEWATER TREATMENT WORKS

INFRASTRUCTURE RENEWAL PLAN
HOW NEW BLOWER ROOM 1.1kW MCC ROOM FAN
STARTER DRIVE SCHEMATIC

DESIGN MANAGER

DATE: AUG 21

SCALE: NTS

AMENDMENTS	APPROVED	DATE
T00 ISSUED FOR TENDER	DMcD	AUG 21

DRAWING No.
JW NUMBER
CONSULTANT'S NUMBER 18056-73-12-132
FILE No 18056
T 0 0

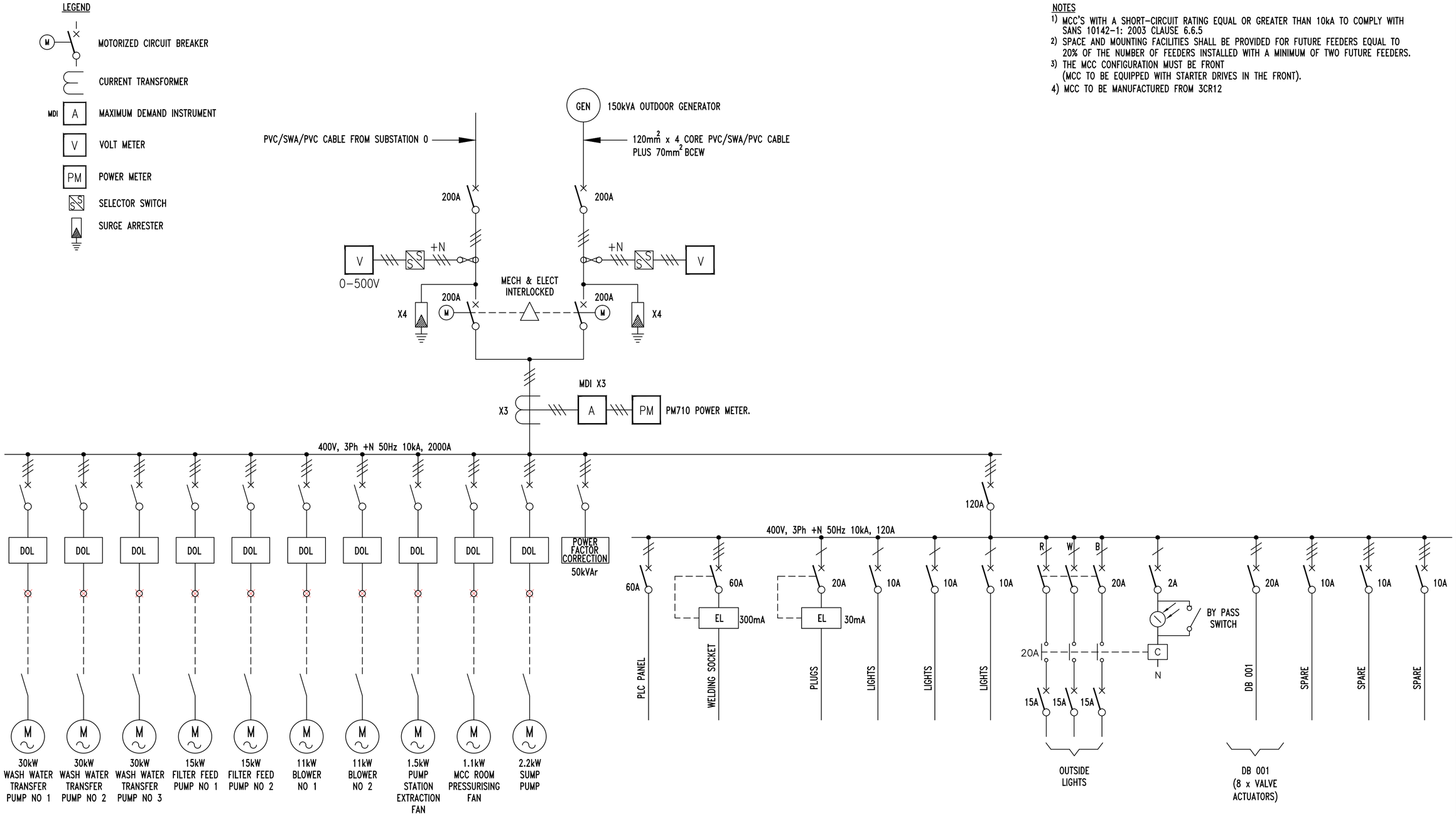

NOTES

1) MCC'S WITH A SHORT-CIRCUIT RATING EQUAL OR GREATER THAN 10kA TO COMPLY WITH SANS 10142-1: 2003 CLAUSE 6.6.5
2) SPACE AND MOUNTING FACILITIES SHALL BE PROVIDED FOR FUTURE FEEDERS EQUAL TO 20% OF THE NUMBER OF FEEDERS INSTALLED WITH A MINIMUM OF TWO FUTURE FEEDERS.
3) THE MCC CONFIGURATION MUST BE FRONT (MCC TO BE EQUIPPED WITH STARTER DRIVES IN THE FRONT).
4) MCC TO BE MANUFACTURED FROM 3CR12

DEPARTMENT	APPROVED	DESIGNATION	DATE

CONSULTING ENGINEERS

ZITHOLELE CONSULTING

ZITHOLELE
P.O. BOX 6002
HALFWAY HOUSE
1685
TEL. 011-254 4800
FAX. 011-805 2100
EMAIL mail@zitholele.co.za

SURVEYED	
DESIGNED	DMcD
DRAWN	DMcD
CHECKED	
SERVICES CHECKED	
GEOTECHNICAL INVESTIGATION	
SERVITUDES	

APPROVED: DMcD
Pr. Eng. No: 200270017.
DATE: AUGUST 2021

JOHANNESBURG WATER (PTY) LTD

Johannesburg Water

17 HARRISON STREET
MARSHALLTOWN
2107

TEL: (011) 688-1400
FAX: (011) 688-1529

CITY OF JOHANNESBURG

BUSHKOPPIE WASTEWATER TREATMENT WORKS

INFRASTRUCTURE RENEWAL PLAN
WASH WATER PUMP STATION MCC
SINGLE LINE DIAGRAM

DESIGN MANAGER

DATE: AUG 21

SCALE: NTS

AMENDMENTS		APPROVED	DATE
T00	ISSUED FOR TENDER	DMcD	AUG 21
T01	ISSUED FOR TENDER	DMcD	MAR 24

DRAWING No.

JW NUMBER

CONSULTANT'S NUMBER
18056-73-12-133

FILE No
18056

T 0 1

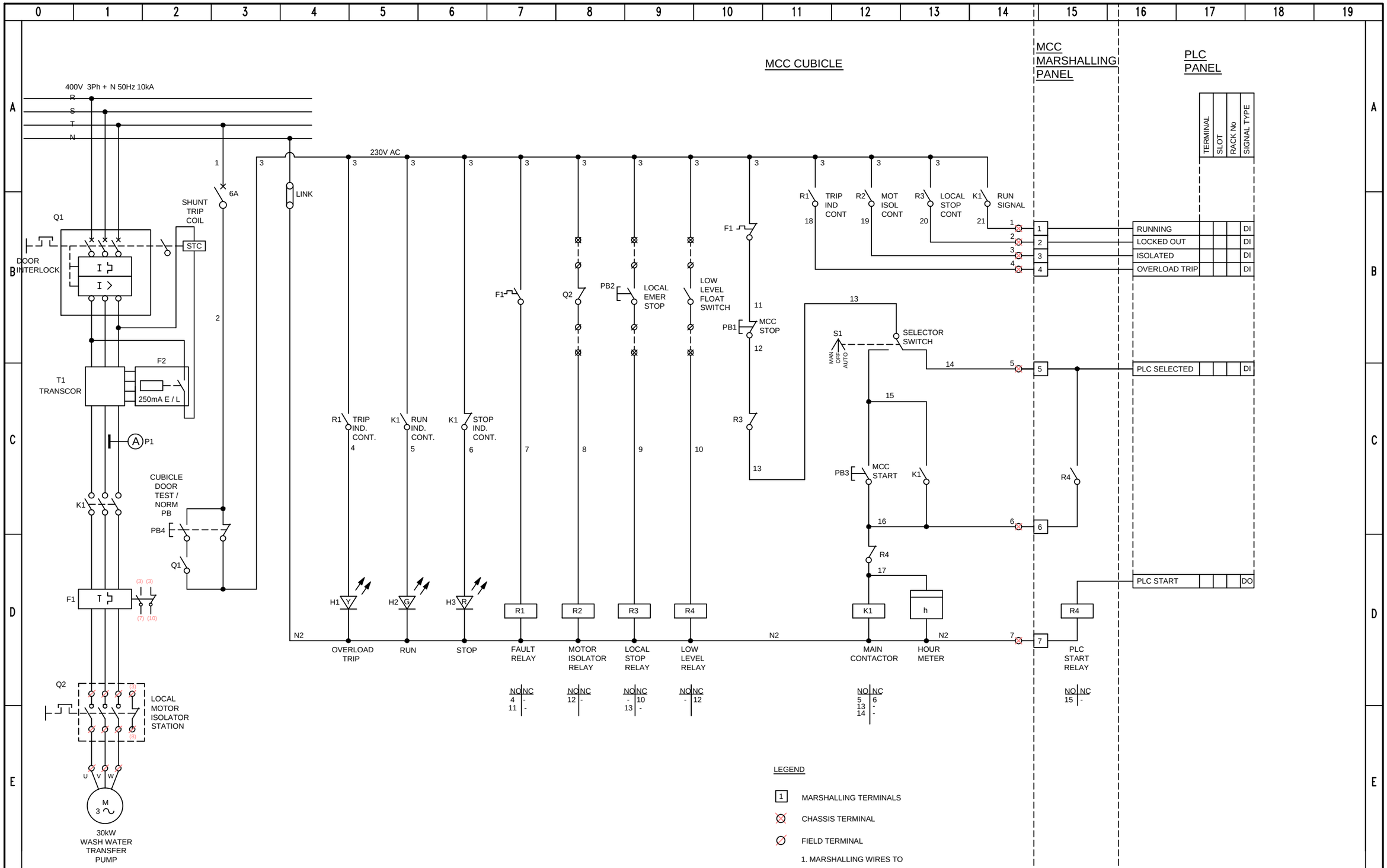

DEPARTMENT	APPROVED	DESIGNATION	DATE

CONSULTING ENGINEERS

ZITHOLELE CONSULTING

ZITHOLELE
P.O. BOX 6002
HALFWAY HOUSE
1685
TEL. 011-254 4800
FAX. 011-805 2100
EMAIL mail@zitholele.co.za

SURVEYED	
DESIGNED	DMcD
DRAWN	DMcD
CHECKED	
SERVICES CHECKED	
GEOTECHNICAL INVESTIGATION	
SERVITUDES	

APPROVED: DMcD
Pr. Eng. No: 200270017.
DATE: AUGUST 2021

JOHANNESBURG WATER (PTY) LTD

Johannesburg Water

17 HARRISON STREET
MARSHALLTOWN
2107

TEL: (011) 688-1400
FAX: (011) 688-1529

CITY OF JOHANNESBURG

BUSHKOPPIE WASTEWATER TREATMENT WORKS

INFRASTRUCTURE RENEWAL PLAN
WASH WATER PUMP STATION
TYPICAL 30kW WASH WATER TRANSFER PUMP
DOL STARTER DRIVE SCHEMATIC

DESIGN MANAGER

DATE: AUG 21

SCALE: NTS

AMENDMENTS		APPROVED	DATE
T00	ISSUED FOR TENDER	DMcD	AUG 21

DRAWING No.

JW NUMBER

CONSULTANT'S NUMBER
18056-73-12-134

FILE No
18056

T 0 0

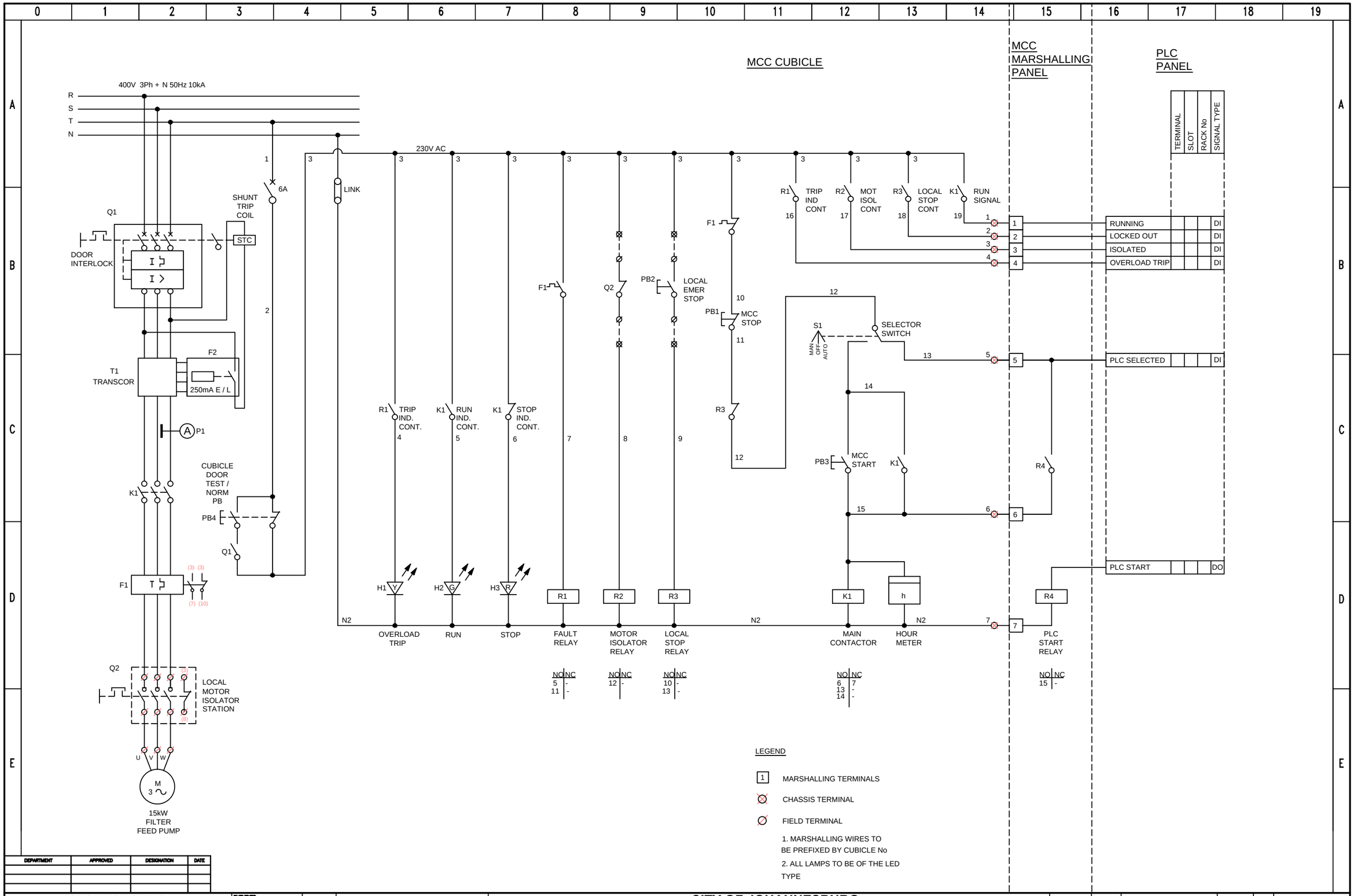

DEPARTMENT	APPROVED	DESIGNATION	DATE

CONSULTING ENGINEERS

ZITHOLELE CONSULTING

ZITHOLELE
P.O. BOX 6002
HALFWAY HOUSE
1685
TEL. 011-254 4800
FAX. 011-805 2100
EMAIL mail@zitholele.co.za

SURVEYED	
DESIGNED	DMcD
DRAWN	DMcD
CHECKED	
SERVICES CHECKED	
GEOTECHNICAL INVESTIGATION	
SERVITUDES	

APPROVED: DMcD
Pr. Eng. No: 200270017.
DATE: AUGUST 2021

JOHANNESBURG WATER (PTY) LTD

Johannesburg Water

17 HARRISON STREET
MARSHALLTOWN
2107

TEL: (011) 688-1400
FAX: (011) 688-1529

CITY OF JOHANNESBURG

BUSHKOPPIE WASTEWATER TREATMENT WORKS

INFRASTRUCTURE RENEWAL PLAN
WASH WATER PUMP STATION
TYPICAL 15kW FILTER FEED PUMP
DOL STARTER DRIVE SCHEMATIC

DESIGN MANAGER

DATE: AUG 21

SCALE: NTS

T00	ISSUED FOR TENDER	DMcD	AUG 21

AMENDMENTS

DRAWING No.
JW NUMBER
CONSULTANT'S NUMBER 18056-73-12-135
FILE No 18056
T 0 0

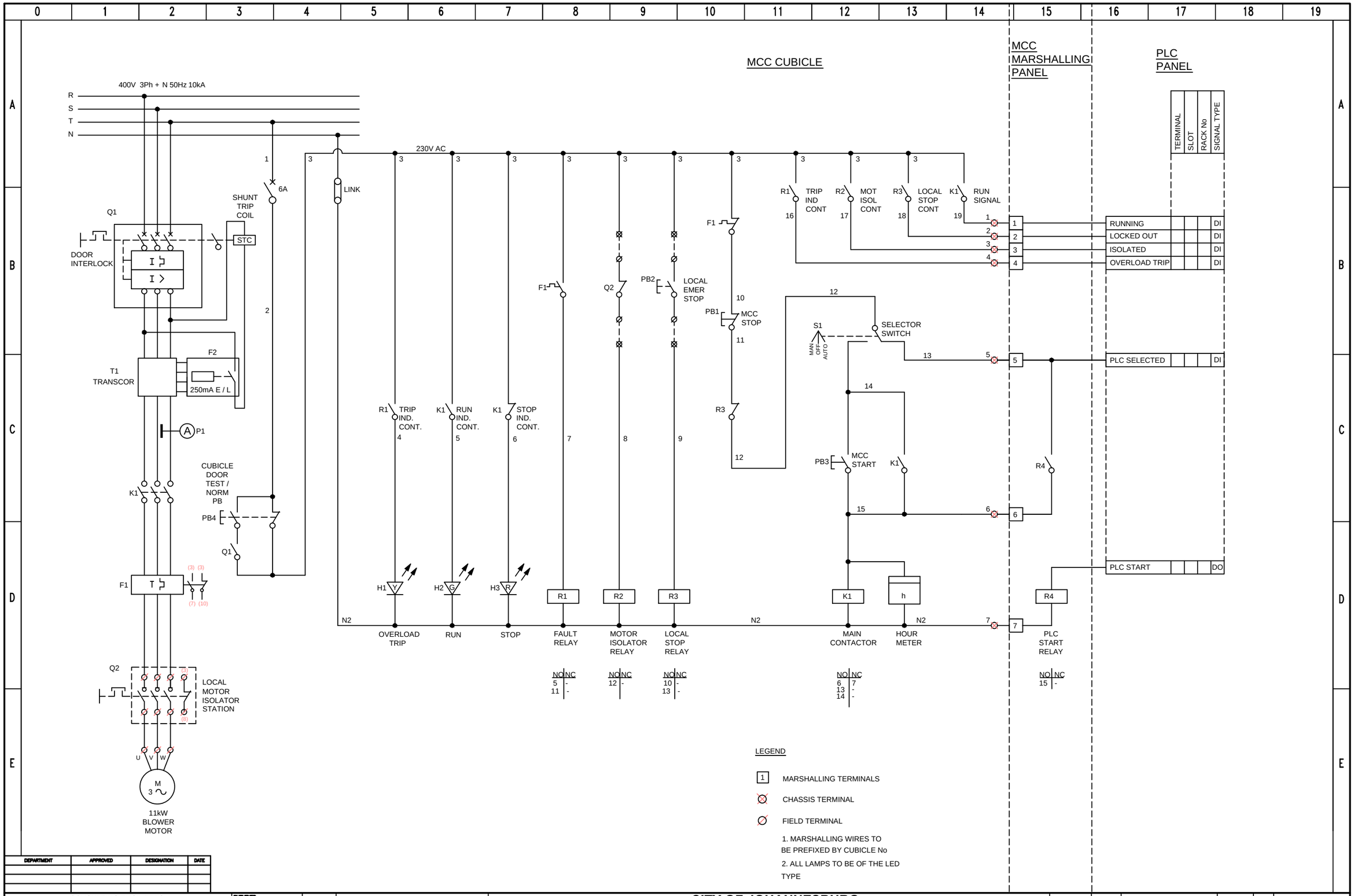

DEPARTMENT	APPROVED	DESIGNATION	DATE

CONSULTING ENGINEERS

ZITHOLELE CONSULTING

ZITHOLELE
P.O. BOX 6002
HALFWAY HOUSE
1685
TEL. 011-254 4800
FAX. 011-805 2100
EMAIL mail@zitholele.co.za

SURVEYED	
DESIGNED	DMcD
DRAWN	DMcD
CHECKED	
SERVICES CHECKED	
GEOTECHNICAL INVESTIGATION	
SERVITUDES	

APPROVED: DMcD
Pr. Eng. No: 200270017.
DATE: AUGUST 2021

JOHANNESBURG WATER (PTY) LTD

Johannesburg Water

17 HARRISON STREET
MARSHALLTOWN
2107

TEL: (011) 688-1400
FAX: (011) 688-1529

CITY OF JOHANNESBURG

BUSHKOPPIE WASTEWATER TREATMENT WORKS

INFRASTRUCTURE RENEWAL PLAN
WASH WATER PUMP STATION
TYPICAL 11kW BLOWER
DOL STARTER DRIVE SCHEMATIC

DESIGN MANAGER

DATE: AUG 21

SCALE: NTS

T00	ISSUED FOR TENDER	DMcD	AUG 21

AMENDMENTS

DRAWING No.
JW NUMBER
CONSULTANT'S NUMBER 18056-73-12-136
FILE No 18056
T 0 0

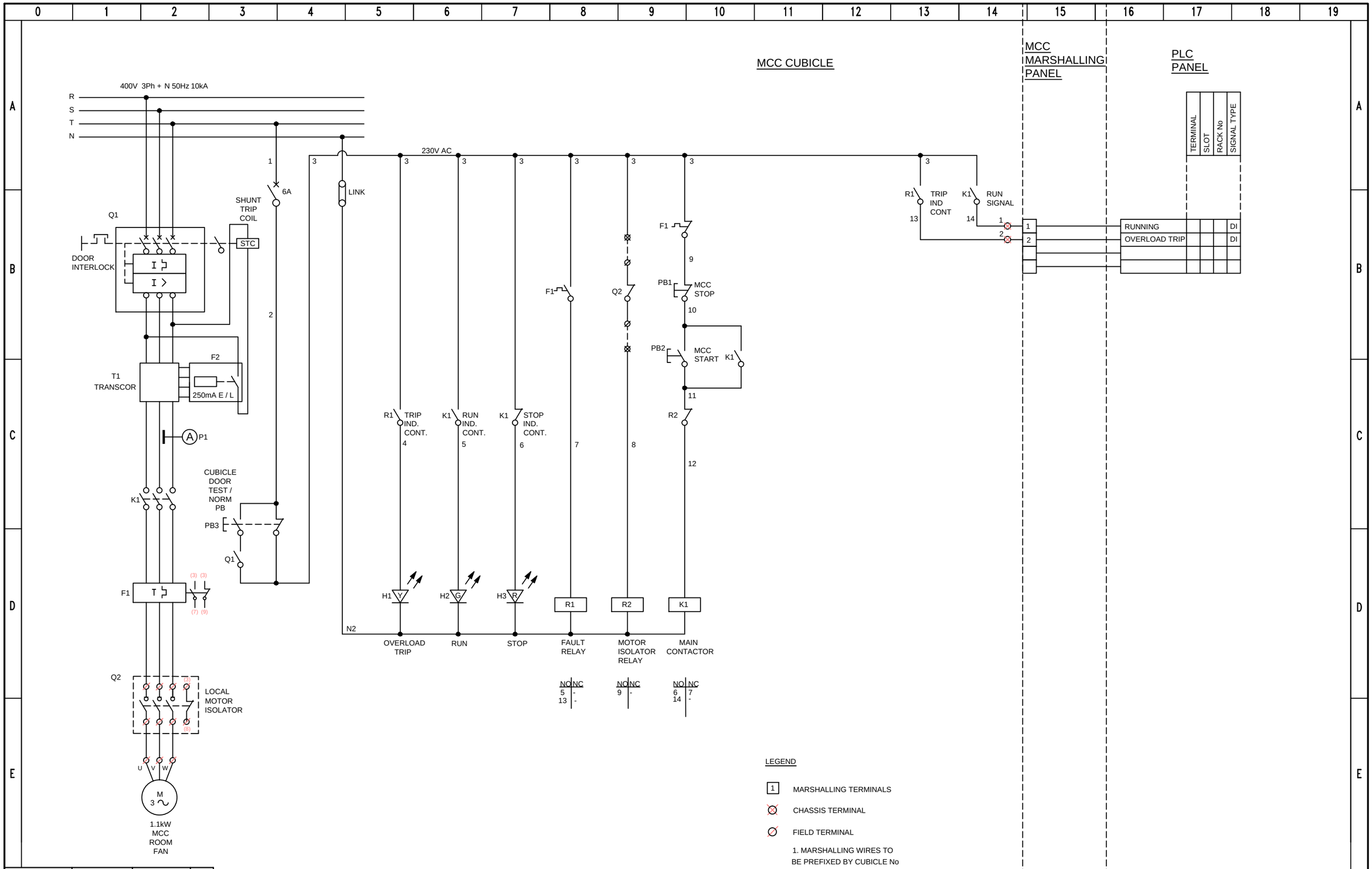

LEGEND

- 1 MARSHALLING TERMINALS
- CHASSIS TERMINAL
- FIELD TERMINAL

1. MARSHALLING WIRES TO BE PREFIXED BY CUBICLE No
2. ALL LAMPS TO BE OF THE LED TYPE

DEPARTMENT	APPROVED	DESIGNATION	DATE

CONSULTING ENGINEERS

ZITHOLELE CONSULTING

ZITHOLELE
P.O. BOX 6002
HALFWAY HOUSE
1685
TEL. 011-254 4800
FAX. 011-805 2100
EMAIL mail@zitholele.co.za

SURVEYED	
DESIGNED	DMcD
DRAWN	DMcD
CHECKED	
SERVICES CHECKED	
GEOTECHNICAL INVESTIGATION	
SERMTUDES	

APPROVED: DMcD
Pr. Eng. No: 200270017.
DATE: AUGUST 2021

JOHANNESBURG WATER (PTY) LTD

Johannesburg Water

17 HARRISON STREET
MARSHALLTOWN
2107

TEL: (011) 688-1400
FAX: (011) 688-1529

CITY OF JOHANNESBURG

BUSHKOPPIE WASTEWATER TREATMENT WORKS

INFRASTRUCTURE RENEWAL PLAN
WASH WATER PUMP STATION
1.1kW MCC ROOM FAN
STARTER DRIVE SCHEMATIC

DESIGN MANAGER

DATE: AUG 21

SCALE: NTS

AMENDMENTS	APPROVED	DATE
T00 ISSUED FOR TENDER	DMcD	AUG 21

DRAWING No.
JW NUMBER
CONSULTANT'S NUMBER 18056-73-12-137
FILE No 18056
T 0 0

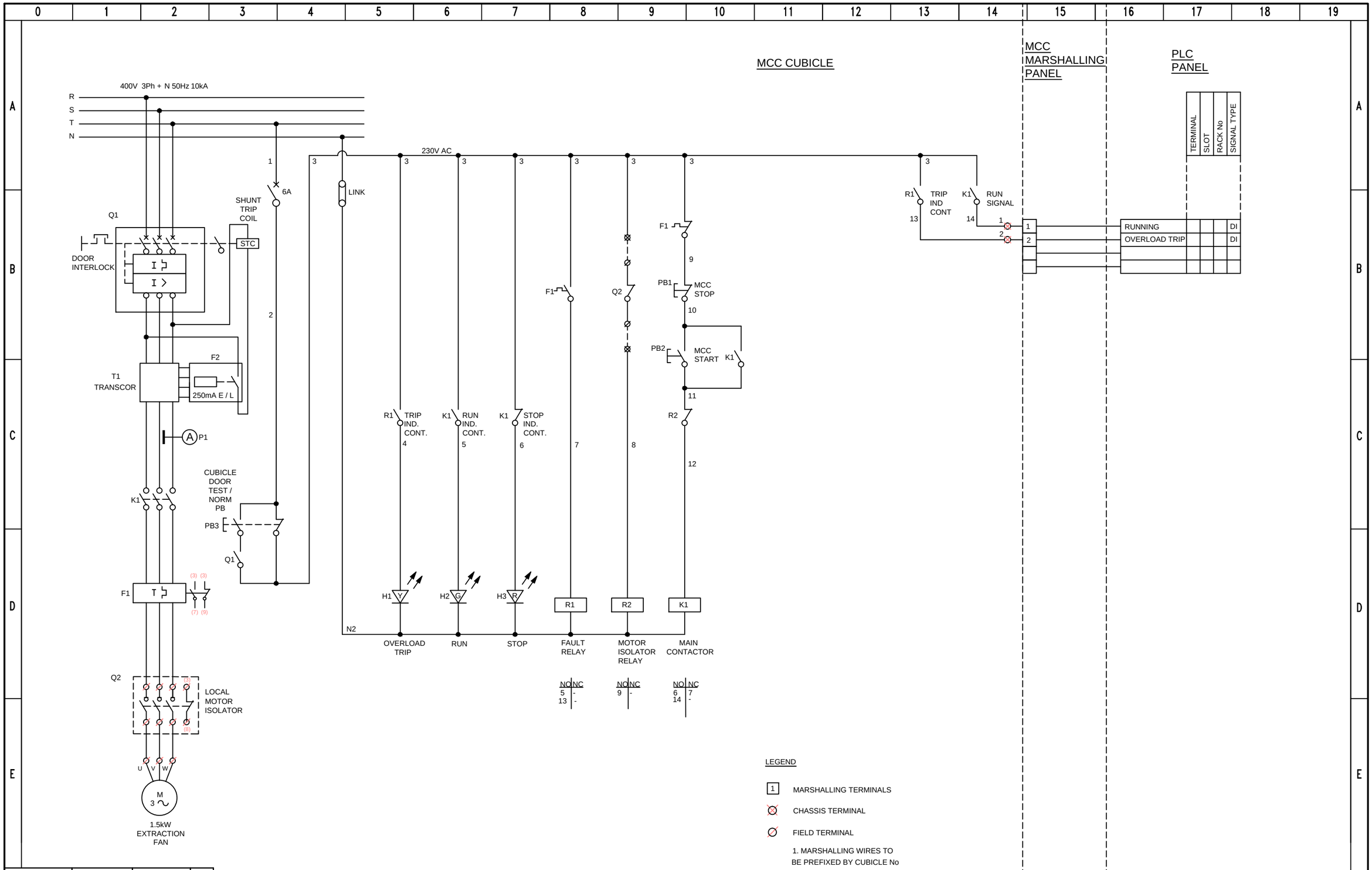

DEPARTMENT	APPROVED	DESIGNATION	DATE

CONSULTING ENGINEERS

ZITHOLELE CONSULTING

ZITHOLELE
P.O. BOX 6002
HALFWAY HOUSE
1685
TEL. 011-254 4800
FAX. 011-805 2100
EMAIL mail@zitholele.co.za

SURVEYED	
DESIGNED	DMcD
DRAWN	DMcD
CHECKED	
SERVICES CHECKED	
GEOTECHNICAL INVESTIGATION	
SERVITUDES	

APPROVED: DMcD
Pr. Eng. No: 200270017.
DATE: AUGUST 2021

JOHANNESBURG WATER (PTY) LTD

Johannesburg Water

17 HARRISON STREET
MARSHALLTOWN
2107

TEL: (011) 688-1400
FAX: (011) 688-1529

CITY OF JOHANNESBURG

BUSHKOPPIE WASTEWATER TREATMENT WORKS

INFRASTRUCTURE RENEWAL PLAN
WASH WATER PUMP STATION
1.5kW EXTRACTION FAN
STARTER DRIVE SCHEMATIC

DESIGN MANAGER

DATE: AUG 21

SCALE: NTS

AMENDMENTS	APPROVED	DATE
T00 ISSUED FOR TENDER	DMcD	AUG 21

DRAWING No.
JW NUMBER
CONSULTANT'S NUMBER 18056-73-12-138
FILE No 18056
T 0 0

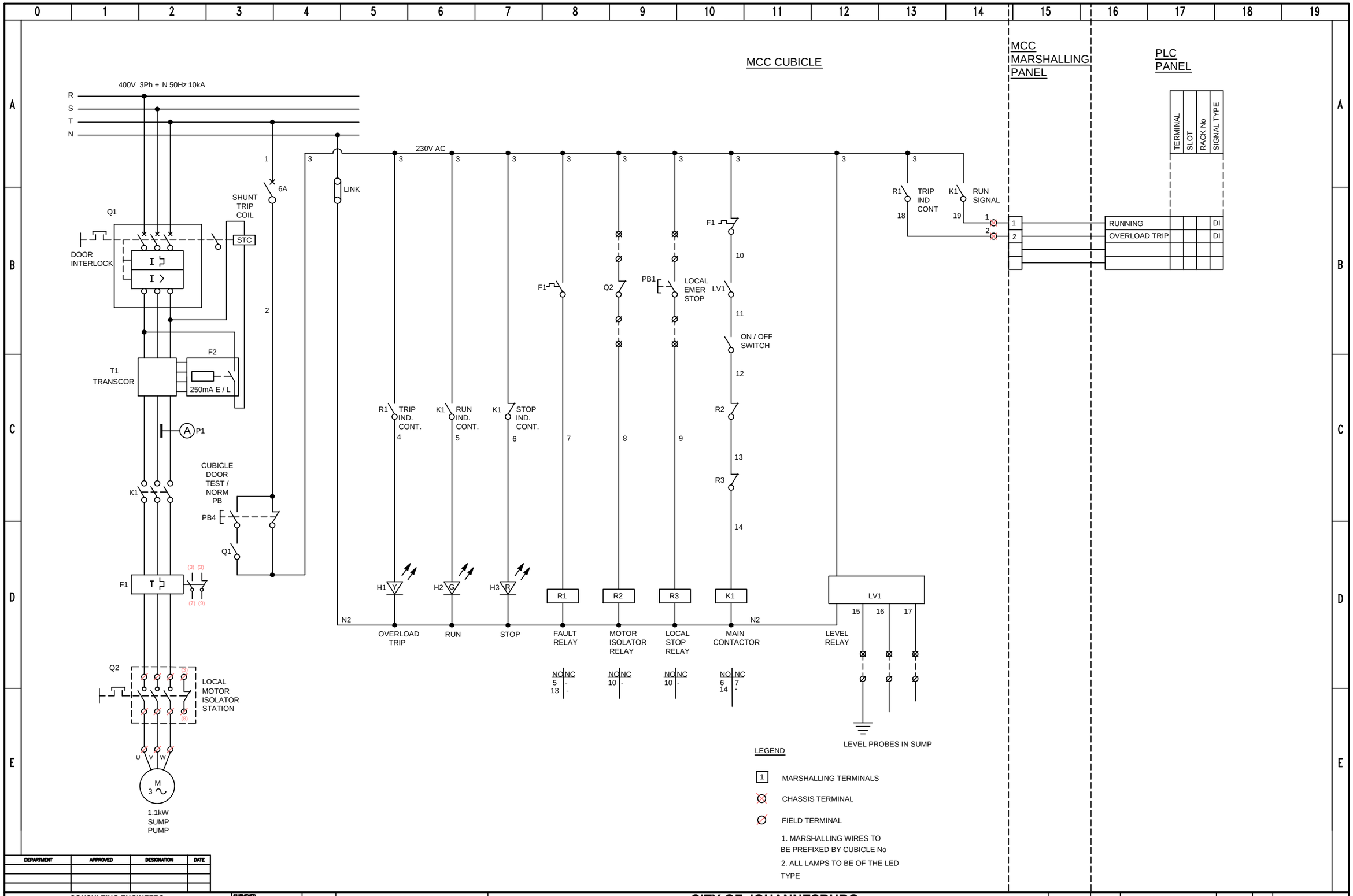

DEPARTMENT	APPROVED	DESIGNATION	DATE

CONSULTING ENGINEERS

ZITHOLELE CONSULTING

ZITHOLELE
P.O. BOX 6002
HALFWAY HOUSE
1685
TEL. 011-254 4800
FAX. 011-805 2100
EMAIL mail@zitholele.co.za

SURVEYED	
DESIGNED	DMcD
DRAWN	DMcD
CHECKED	
SERVICES CHECKED	
GEOTECHNICAL INVESTIGATION	
SERVITUDES	

APPROVED: DMcD
Pr. Eng. No: 200270017.
DATE: AUGUST 2021

JOHANNESBURG WATER (PTY) LTD

Johannesburg Water

17 HARRISON STREET
MARSHALLTOWN
2107

TEL: (011) 688-1400
FAX: (011) 688-1529

CITY OF JOHANNESBURG

BUSHKOPPIE WASTEWATER TREATMENT WORKS

INFRASTRUCTURE RENEWAL PLAN
WASH WATER PUMP STATION
1.1kW SUMP PUMP
STARTER DRIVE SCHEMATIC

DESIGN MANAGER

DATE: AUG 21

SCALE: NTS

AMENDMENTS	APPROVED	DATE
T00 ISSUED FOR TENDER	DMcD	AUG 21

DRAWING No.
JW NUMBER
CONSULTANT'S NUMBER 18056-73-12-139
FILE No 18056
T 0 0

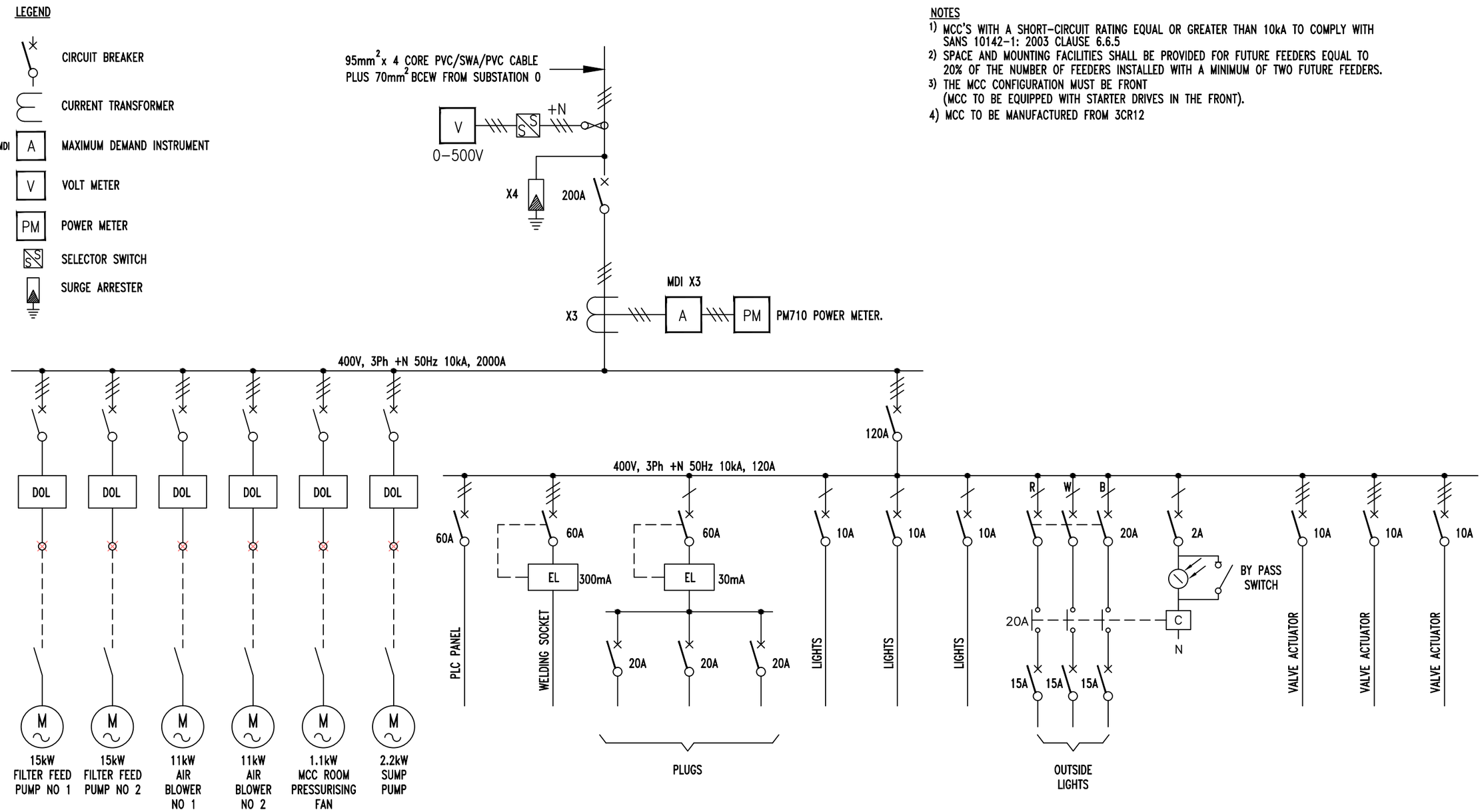

NOTES

1) MCC'S WITH A SHORT-CIRCUIT RATING EQUAL OR GREATER THAN 10kA TO COMPLY WITH SANS 10142-1: 2003 CLAUSE 6.6.5
2) SPACE AND MOUNTING FACILITIES SHALL BE PROVIDED FOR FUTURE FEEDERS EQUAL TO 20% OF THE NUMBER OF FEEDERS INSTALLED WITH A MINIMUM OF TWO FUTURE FEEDERS.
3) THE MCC CONFIGURATION MUST BE FRONT (MCC TO BE EQUIPPED WITH STARTER DRIVES IN THE FRONT).
4) MCC TO BE MANUFACTURED FROM 3CR12

DEPARTMENT	APPROVED	DESIGNATION	DATE

CONSULTING ENGINEERS

ZITHOLELE CONSULTING

ZITHOLELE
P.O. BOX 6002
HALFWAY HOUSE
1685
TEL. 011-254 4800
FAX. 011-805 2100
EMAIL mail@zitholele.co.za

SURVEYED	
DESIGNED	DMcD
DRAWN	DMcD
CHECKED	
SERVICES CHECKED	
GEOTECHNICAL INVESTIGATION	
SERVITUDES	

APPROVED: DMcD
Pr. Eng. No: 200270017.
DATE: AUGUST 2021

JOHANNESBURG WATER (PTY) LTD

Johannesburg Water

17 HARRISON STREET
MARSHALLTOWN
2107

TEL: (011) 688-1400
FAX: (011) 688-1529

CITY OF JOHANNESBURG

BUSHKOPPIE WASTEWATER TREATMENT WORKS

INFRASTRUCTURE RENEWAL PLAN
NEW WASH WATER FILTER STATION MCC
SINGLE LINE DIAGRAM

DESIGN MANAGER

DATE: AUG 21

SCALE: NTS

AMENDMENTS		APPROVED	DATE
T00	ISSUED FOR TENDER	DMcD	AUG 21

DRAWING No.

JW NUMBER

CONSULTANT'S NUMBER 18056-73-12-140

FILE No 18056

T 0 0

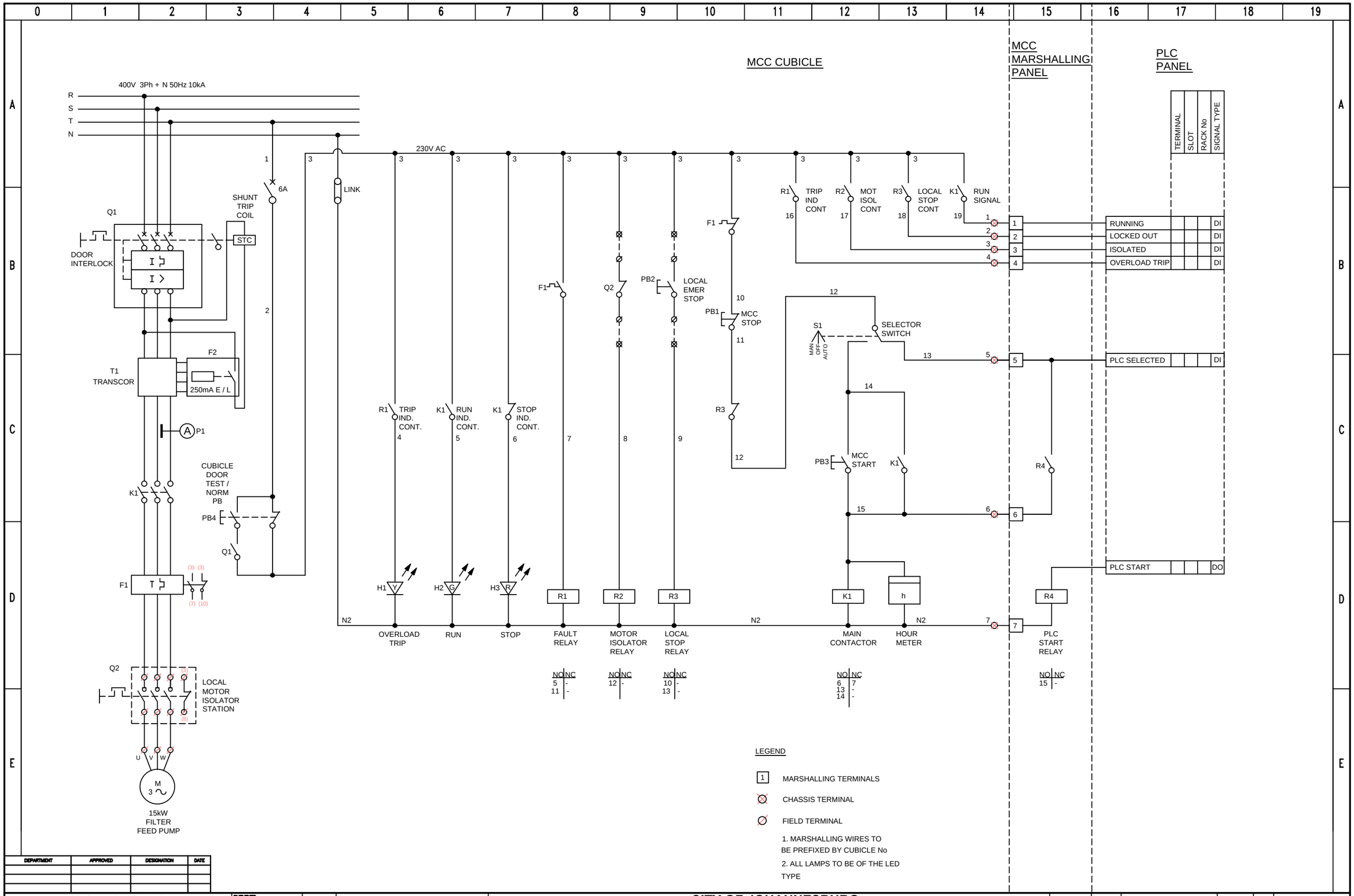

DEPARTMENT	APPROVED	DESIGNATION	DATE

CONSULTING ENGINEERS

ZITHOLELE CONSULTING

ZITHOLELE
P.O. BOX 6002
HALFWAY HOUSE
1685
TEL. 011-254 4800
FAX. 011-805 2100
EMAIL mail@zitholele.co.za

SURVEYED	
DESIGNED	DMcD
DRAWN	DMcD
CHECKED	
SERVICES CHECKED	
GEOTECHNICAL INVESTIGATION	
SERVITUDES	

APPROVED: DMcD
Pr. Eng. No: 200270017.
DATE: AUGUST 2021

JOHANNESBURG WATER (PTY) LTD

Johannesburg Water

17 HARRISON STREET
MARSHALLTOWN
2107

TEL: (011) 688-1400
FAX: (011) 688-1529

CITY OF JOHANNESBURG

BUSHKOPPIE WASTEWATER TREATMENT WORKS

INFRASTRUCTURE RENEWAL PLAN
NEW WASH WATER FILTER STATION
TYPICAL 15kW FILTER FEED PUMP
DOL STARTER DRIVE SCHEMATIC

DESIGN MANAGER

DATE: AUG 21

SCALE: NTS

T00	ISSUED FOR TENDER	DMcD	AUG 21

AMENDMENTS

DRAWING No.
JW NUMBER
CONSULTANT'S NUMBER 18056-73-12-141
FILE No 18056
T 0 0

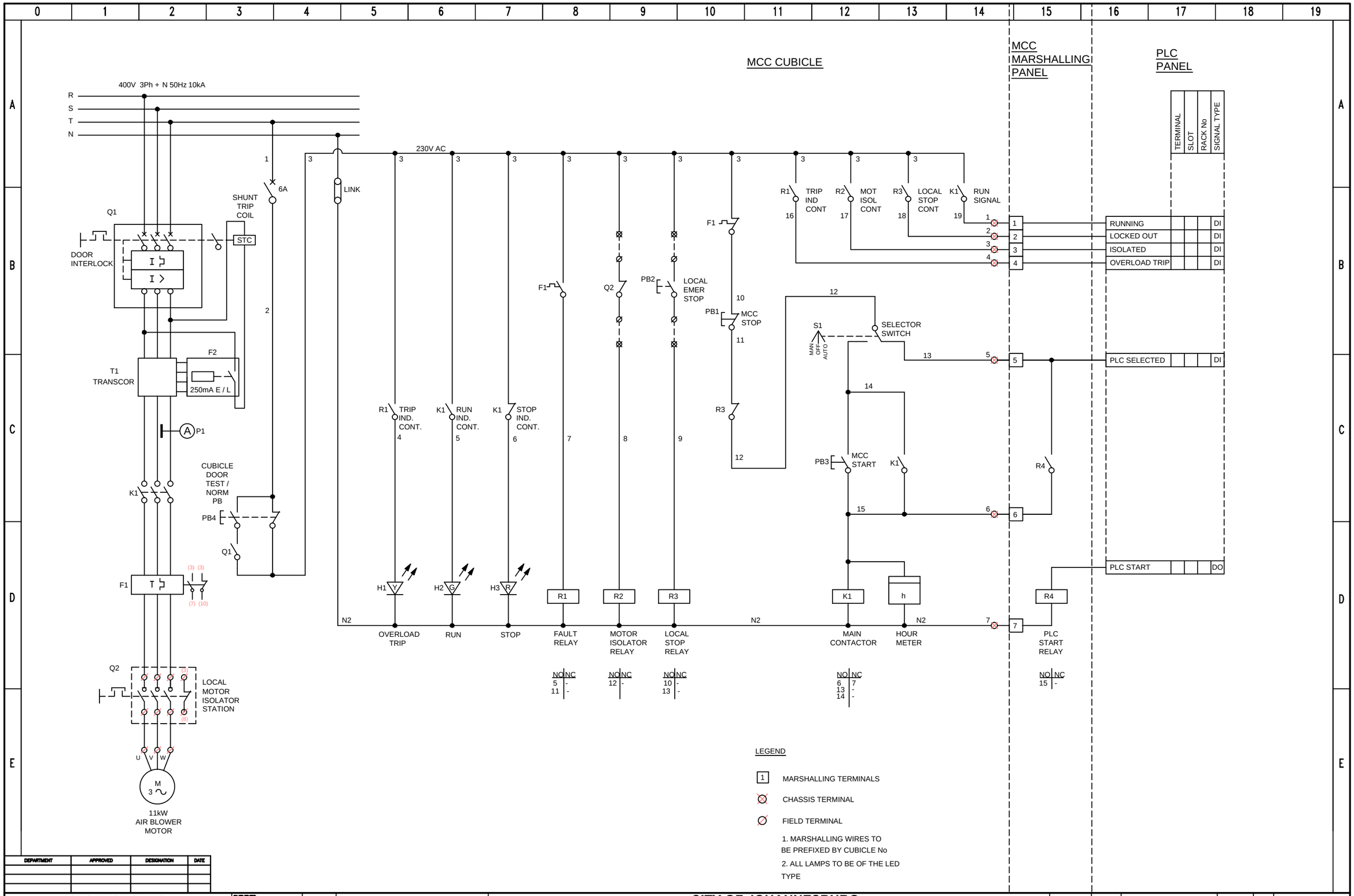

DEPARTMENT	APPROVED	DESIGNATION	DATE

CONSULTING ENGINEERS

ZITHOLELE CONSULTING

ZITHOLELE
P.O. BOX 6002
HALFWAY HOUSE
1685
TEL. 011-254 4800
FAX. 011-805 2100
EMAIL mail@zitholele.co.za

SURVEYED	
DESIGNED	DMcD
DRAWN	DMcD
CHECKED	
SERVICES CHECKED	
GEOTECHNICAL INVESTIGATION	
SERVITUDES	

APPROVED: DMcD
Pr. Eng. No: 200270017.
DATE: AUGUST 2021

JOHANNESBURG WATER (PTY) LTD

Johannesburg Water

17 HARRISON STREET
MARSHALLTOWN
2107

TEL: (011) 688-1400
FAX: (011) 688-1529

CITY OF JOHANNESBURG

BUSHKOPPIE WASTEWATER TREATMENT WORKS

INFRASTRUCTURE RENEWAL PLAN
NEW WASH WATER FILTER STATION
TYPICAL 11kW AIR BLOWER
DOL STARTER DRIVE SCHEMATIC

DESIGN MANAGER

DATE: AUG 21

SCALE: NTS

AMENDMENTS		APPROVED	DATE
T00	ISSUED FOR TENDER	DMcD	AUG 21

DRAWING No.
JW NUMBER
CONSULTANT'S NUMBER 18056-73-12-142
FILE No 18056
T 0 0

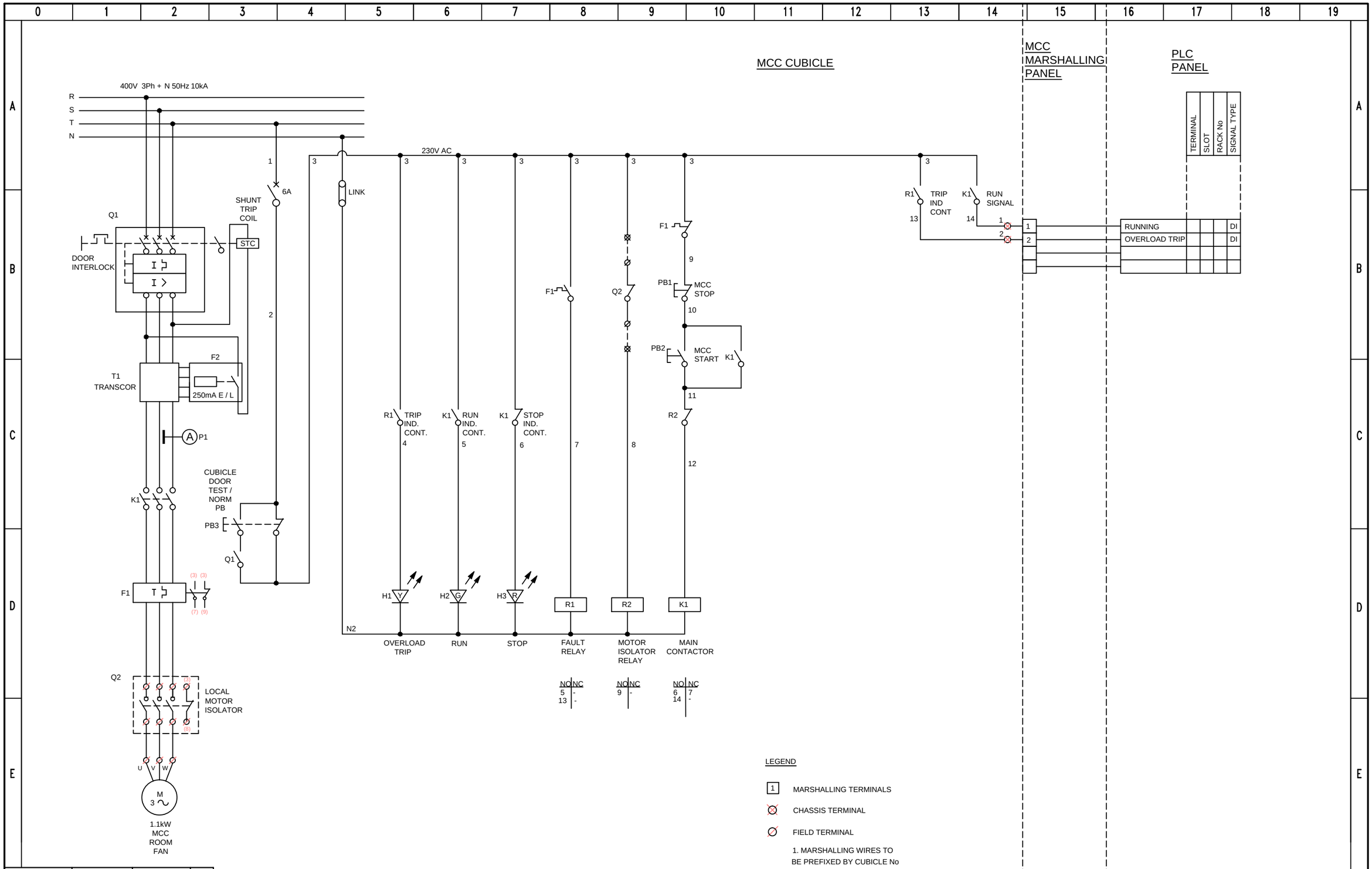

LEGEND

- 1 MARSHALLING TERMINALS
- CHASSIS TERMINAL
- FIELD TERMINAL

1. MARSHALLING WIRES TO BE PREFIXED BY CUBICLE No
2. ALL LAMPS TO BE OF THE LED TYPE

DEPARTMENT	APPROVED	DESIGNATION	DATE

CONSULTING ENGINEERS

ZITHOLELE CONSULTING

ZITHOLELE
P.O. BOX 6002
HALFWAY HOUSE
1685
TEL. 011-254 4800
FAX. 011-805 2100
EMAIL mail@zitholele.co.za

SURVEYED	
DESIGNED	DMcD
DRAWN	DMcD
CHECKED	
SERVICES CHECKED	
GEOTECHNICAL INVESTIGATION	
SERMTUDES	

APPROVED: DMcD
Pr. Eng. No: 200270017.
DATE: AUGUST 2021

JOHANNESBURG WATER (PTY) LTD

Johannesburg Water

17 HARRISON STREET
MARSHALLTOWN
2107

TEL: (011) 688-1400
FAX: (011) 688-1529

CITY OF JOHANNESBURG

BUSHKOPPIE WASTEWATER TREATMENT WORKS

INFRASTRUCTURE RENEWAL PLAN
NEW WASH WATER FILTER STATION
1.1kW MCC ROOM FAN
STARTER DRIVE SCHEMATIC

DESIGN MANAGER

DATE: AUG 21

SCALE: NTS

AMENDMENTS	APPROVED	DATE
T00 ISSUED FOR TENDER	DMcD	AUG 21

DRAWING No.
JW NUMBER
CONSULTANT'S NUMBER 18056-73-12-143
FILE No 18056
T 0 0

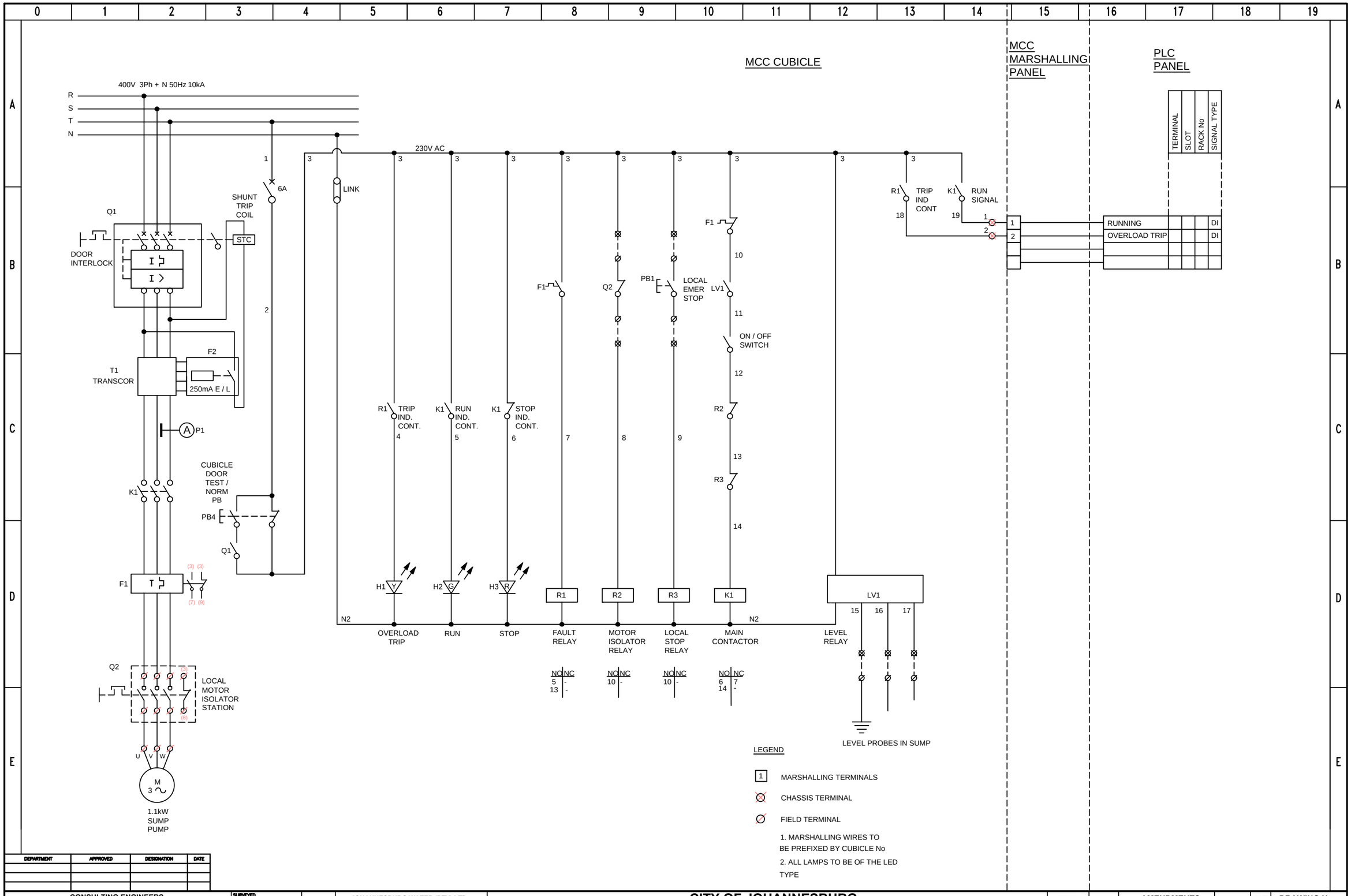

DEPARTMENT	APPROVED	DESIGNATION	DATE

CONSULTING ENGINEERS

ZITHOLELE CONSULTING

ZITHOLELE
P.O. BOX 6002
HALFWAY HOUSE
1685
TEL. 011-254 4800
FAX. 011-805 2100
EMAIL mail@zitholele.co.za

SURVEYED	
DESIGNED	DMcD
DRAWN	DMcD
CHECKED	
SERVICES CHECKED	
GEOTECHNICAL INVESTIGATION	
SERVITUDES	

APPROVED: DMcD
Pr. Eng. No: 200270017.
DATE: AUGUST 2021

JOHANNESBURG WATER (PTY) LTD

Johannesburg Water

17 HARRISON STREET
MARSHALLTOWN
2107

TEL: (011) 688-1400
FAX: (011) 688-1529

CITY OF JOHANNESBURG

BUSHKOPPIE WASTEWATER TREATMENT WORKS

INFRASTRUCTURE RENEWAL PLAN
NEW WASH WATER FILTER STATION
1.1kW SUMP PUMP
STARTER DRIVE SCHEMATIC

DESIGN MANAGER

DATE: AUG 21

SCALE: NTS

AMENDMENTS	APPROVED	DATE
T00 ISSUED FOR TENDER	DMcD	AUG 21

DRAWING No.
JW NUMBER
CONSULTANT'S NUMBER 18056-73-12-144
FILE No 18056
T 0 0

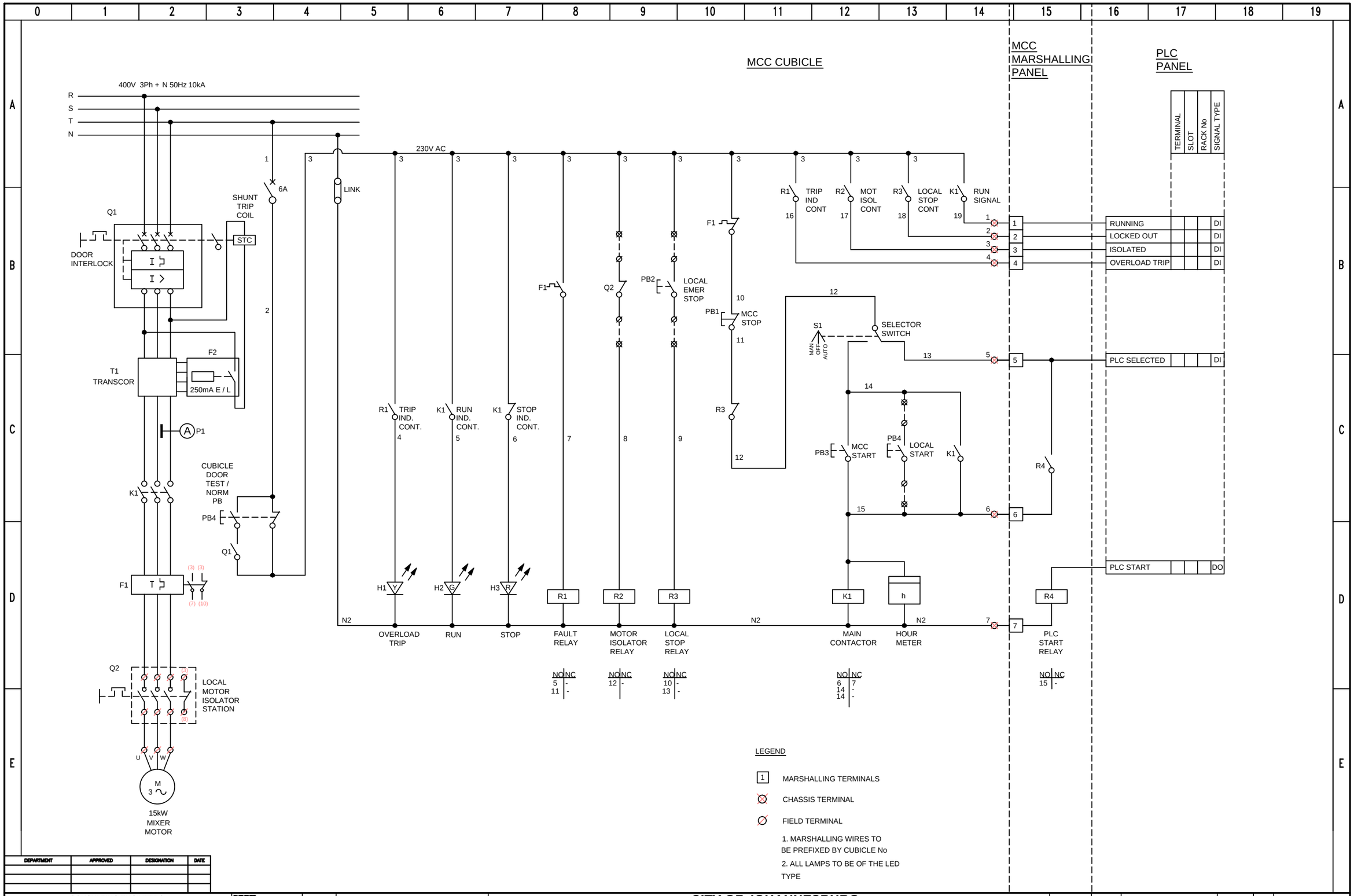

DEPARTMENT	APPROVED	DESIGNATION	DATE

CONSULTING ENGINEERS

ZITHOLELE CONSULTING

ZITHOLELE
P.O. BOX 6002
HALFWAY HOUSE
1685
TEL. 011-254 4800
FAX. 011-805 2100
EMAIL mail@zitholele.co.za

SURVEYED	
DESIGNED	DMcD
DRAWN	DMcD
CHECKED	
SERVICES CHECKED	
GEOTECHNICAL INVESTIGATION	
SERVITUDES	

APPROVED: DMcD
Pr. Eng. No: 200270017.
DATE: AUGUST 2021

JOHANNESBURG WATER (PTY) LTD

Johannesburg Water

17 HARRISON STREET
MARSHALLTOWN
2107

TEL: (011) 688-1400
FAX: (011) 688-1529

CITY OF JOHANNESBURG

BUSHKOPPIE WASTEWATER TREATMENT WORKS

INFRASTRUCTURE RENEWAL PLAN
TYPICAL 15kW MIXER MOTOR
DOL STARTER DRIVE SCHEMATIC

DESIGN MANAGER

DATE: AUG 21

SCALE: NTS

	AMENDMENTS	APPROVED	DATE
T00	ISSUED FOR TENDER	DMcD	AUG 21

DRAWING No.
JW NUMBER
CONSULTANT'S NUMBER 18056-73-12-145
FILE No 18056
T 0 0

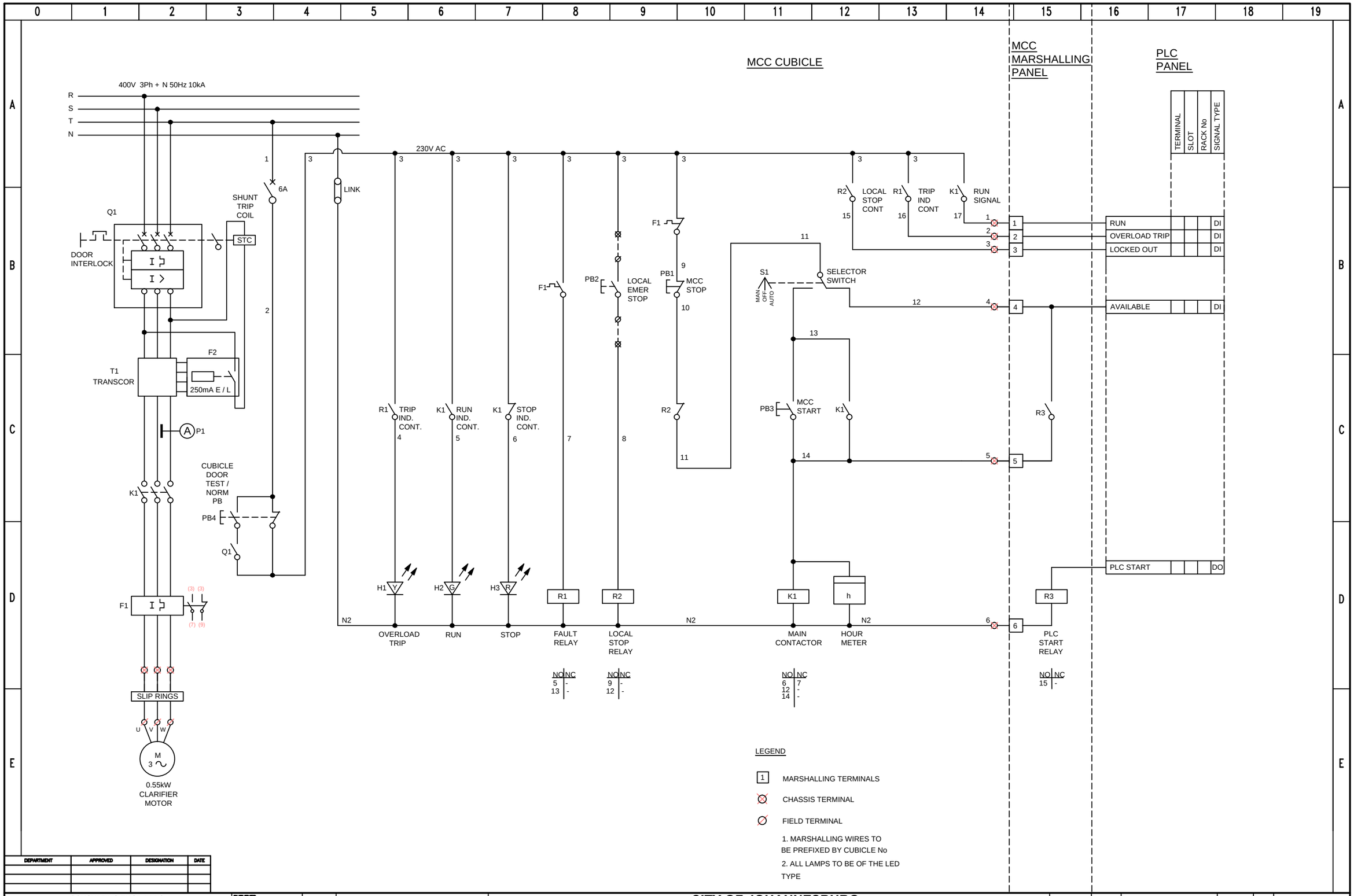

DEPARTMENT	APPROVED	DESIGNATION	DATE

CONSULTING ENGINEERS

ZITHOLELE CONSULTING

ZITHOLELE
P.O. BOX 6002
HALFWAY HOUSE
1685
TEL. 011-254 4800
FAX. 011-805 2100
EMAIL mail@zitholele.co.za

SURVEYED	
DESIGNED	DMcD
DRAWN	DMcD
CHECKED	
SERVICES CHECKED	
GEOTECHNICAL INVESTIGATION	
SERVITUDES	

APPROVED: DMcD
Pr. Eng. No: 200270017.
DATE: AUGUST 2021

JOHANNESBURG WATER (PTY) LTD

Johannesburg Water

17 HARRISON STREET
MARSHALLTOWN
2107

TEL: (011) 688-1400
FAX: (011) 688-1529

CITY OF JOHANNESBURG

BUSHKOPPIE WASTEWATER TREATMENT WORKS

INFRASTRUCTURE RENEWAL PLAN
TYPICAL 0.55kW CLARIFIER
DOL STARTER DRIVE SCHEMATIC

DESIGN MANAGER

DATE: AUG 21

SCALE: NTS

T00	AMENDMENTS	APPROVED	DATE
	ISSUED FOR TENDER	DMcD	AUG 21

DRAWING No.
JW NUMBER
CONSULTANT'S NUMBER 18056-73-12-146
FILE No 18056
T 0 0

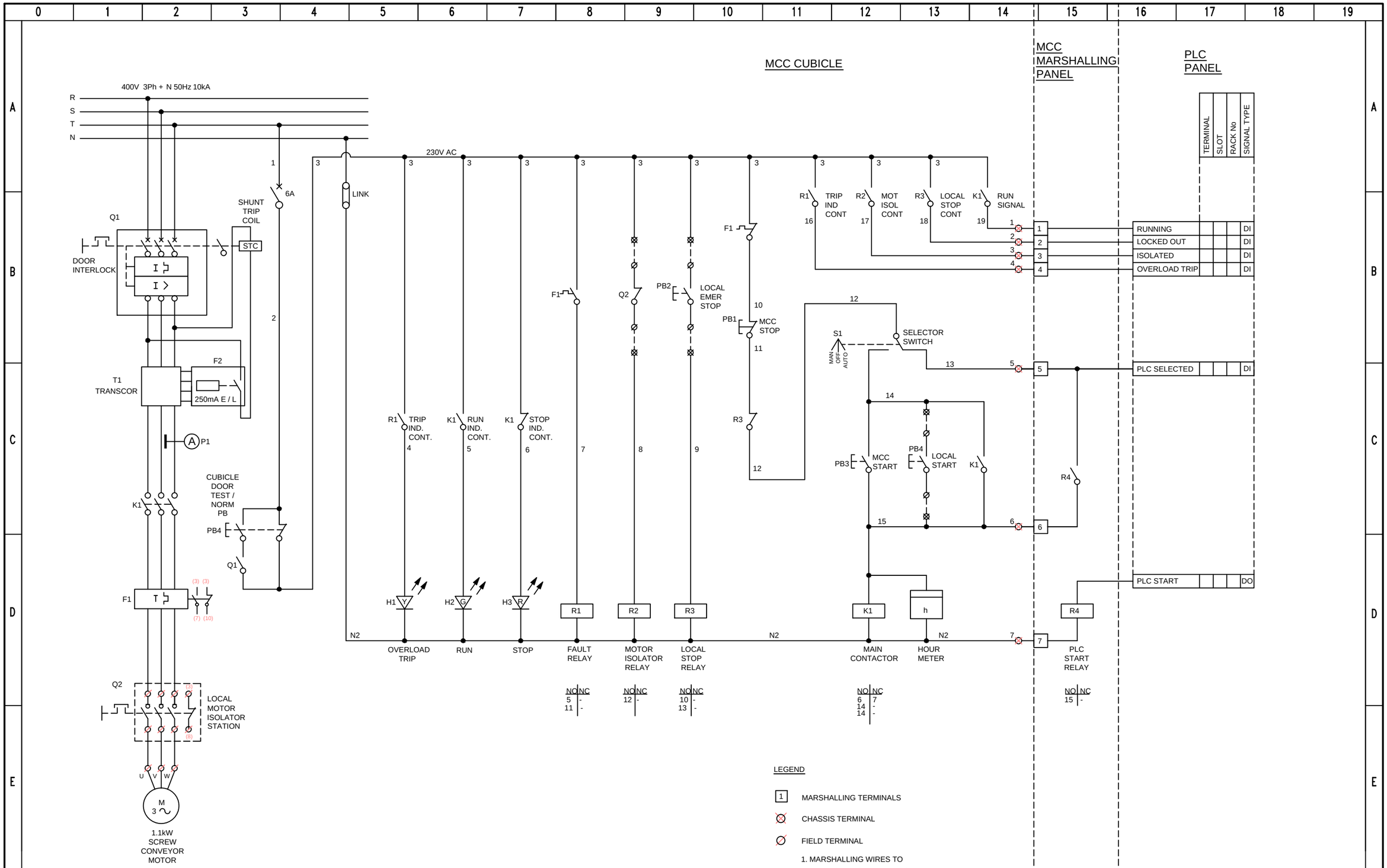

DEPARTMENT	APPROVED	DESIGNATION	DATE

CONSULTING ENGINEERS

ZITHOLELE CONSULTING

ZITHOLELE
P.O. BOX 6002
HALFWAY HOUSE
1685
TEL. 011-254 4800
FAX. 011-805 2100
EMAIL mail@zitholele.co.za

SURVEYED	
DESIGNED	DMcD
DRAWN	DMcD
CHECKED	
SERVICES CHECKED	
GEOTECHNICAL INVESTIGATION	
SERVITUDES	

APPROVED: DMcD
Pr. Eng. No: 200270017.
DATE: AUGUST 2021

JOHANNESBURG WATER (PTY) LTD

Johannesburg Water

17 HARRISON STREET
MARSHALLTOWN
2107

TEL: (011) 688-1400
FAX: (011) 688-1529

CITY OF JOHANNESBURG

BUSHKOPPIE WASTEWATER TREATMENT WORKS

INFRASTRUCTURE RENEWAL PLAN
TYPICAL 1.1kW SCREW CONVEYOR MOTOR
DOL STARTER DRIVE SCHEMATIC

DESIGN MANAGER

DATE: AUG 21

SCALE: NTS

T00	ISSUED FOR TENDER	DMcD	AUG 21

AMENDMENTS

DRAWING No.
JW NUMBER
CONSULTANT'S NUMBER 18056-73-12-147
FILE No 18056
T 0 0

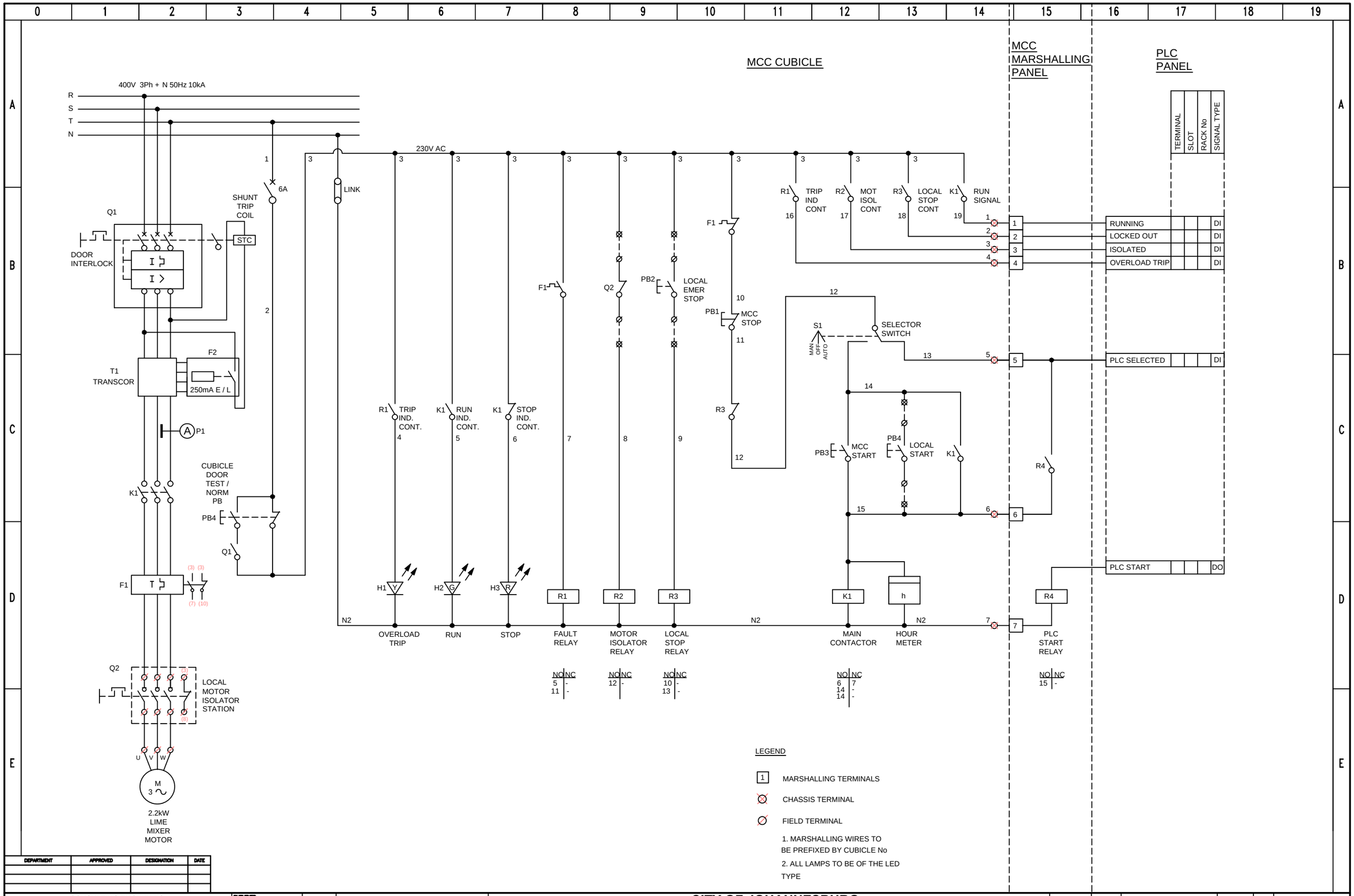

DEPARTMENT	APPROVED	DESIGNATION	DATE

CONSULTING ENGINEERS

ZITHOLELE CONSULTING

ZITHOLELE
P.O. BOX 6002
HALFWAY HOUSE
1685
TEL. 011-254 4800
FAX. 011-805 2100
EMAIL mail@zitholele.co.za

SURVEYED	
DESIGNED	DMcD
DRAWN	DMcD
CHECKED	
SERVICES CHECKED	
GEOTECHNICAL INVESTIGATION	
SERVITUDES	

APPROVED: DMcD
Pr. Eng. No: 200270017.
DATE: AUGUST 2021

JOHANNESBURG WATER (PTY) LTD

Johannesburg Water

17 HARRISON STREET
MARSHALLTOWN
2107

TEL: (011) 688-1400
FAX: (011) 688-1529

CITY OF JOHANNESBURG

BUSHKOPPIE WASTEWATER TREATMENT WORKS

INFRASTRUCTURE RENEWAL PLAN
TYPICAL 2.2kW LIME MIXER MOTOR
DOL STARTER DRIVE SCHEMATIC

DESIGN MANAGER

DATE: AUG 21

SCALE: NTS

AMENDMENTS		APPROVED	DATE
T00	ISSUED FOR TENDER	DMcD	AUG 21

DRAWING No.
JW NUMBER
CONSULTANT'S NUMBER 18056-73-12-148
FILE No 18056
T 0 0

LEGEND:

- C1 — 1.2m 46W IP65 POLYCARBONATE LED (NATURAL WHITE) LUMINAIRE.
- C2 — 1.2m 46W IP65 POLYCARBONATE LED (NATURAL WHITE) EMERGENCY LUMINAIRE (1 HOUR).
- B1 — 18W IP65 LED (NATURAL WHITE) OUTDOOR BULKHEAD.
- PHOTO CELL
- FLUSH MOUNTED 16A ONE LEVER ONE WAY SWITCH
- FLUSH MOUNTED 16A 3 PIN SWITCHED SOCKET OUTLET
- FLUSH MOUNTED DUO 16A 3 PIN SWITCHED SOCKET OUTLET
- SURFACE MOUTED 60A 5 PIN (ROUND) WELDING SOCKET OUTLET
- SURFACE MOUTED 30A 3 PHASE FAN ISOLATOR
- MCC ROOM PRESSURISING FAN

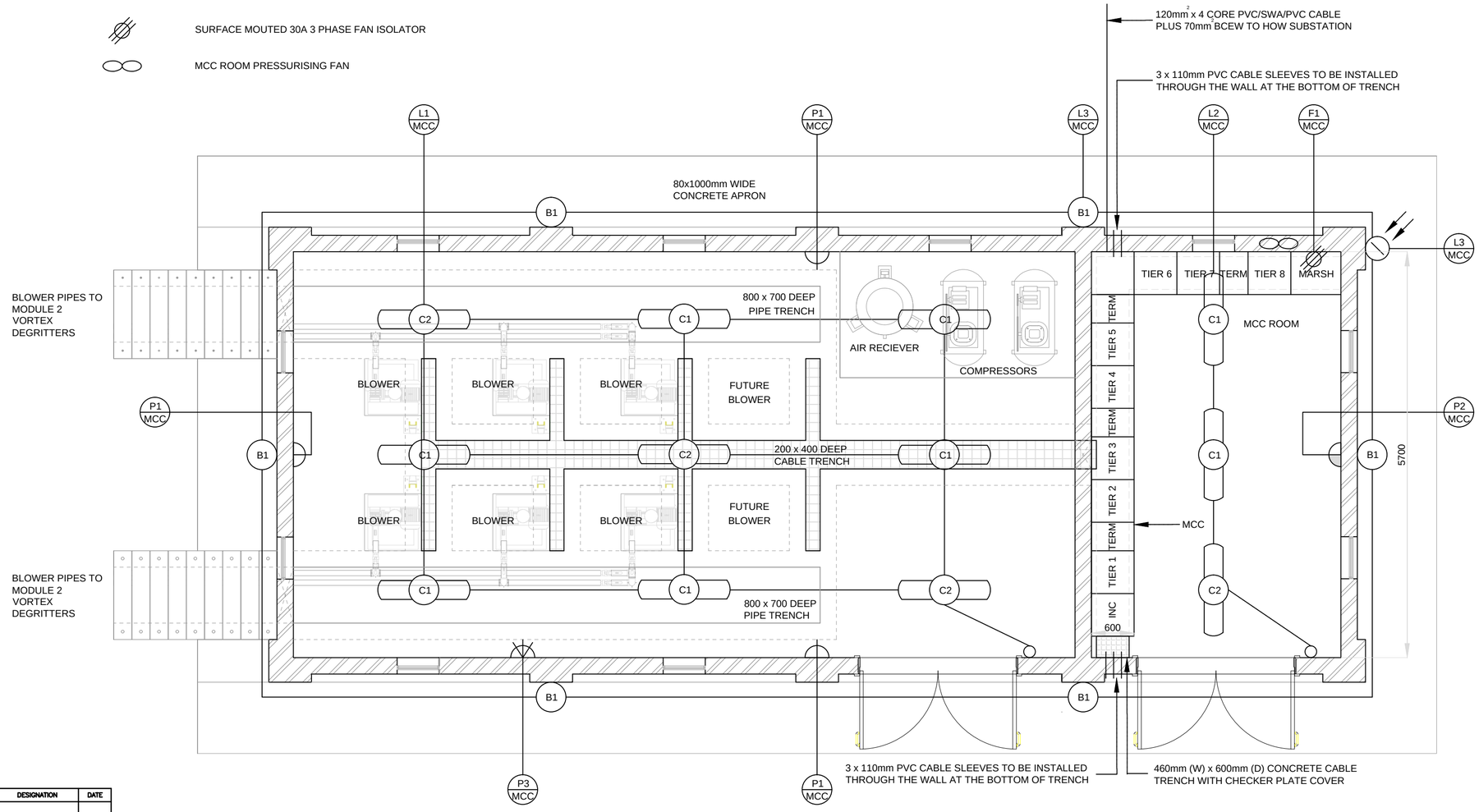

DEPARTMENT	APPROVED	DESIGNATION	DATE

CONSULTING ENGINEERS

ZITHOLELE CONSULTING

ZITHOLELE
P.O. BOX 6002
HALFWAY HOUSE
1685
TEL. 011-254 4800
FAX. 011-805 2100
EMAIL mail@zitholele.co.za

SURVEYED	
DESIGNED	DMcD
DRAWN	DMcD
CHECKED	
SERVICES CHECKED	
GEOTECHNICAL INVESTIGATION	
SERVITUDES	
APPROVED	DMcD
Pr. Eng. No.	200270017
DATE	AUGUST 2021

JOHANNESBURG WATER (PTY) LTD

Johannesburg Water

17 HARRISON STREET
MARSHALLTOWN
2107

TEL: (011) 688-1400
FAX: (011) 688-1529

CITY OF JOHANNESBURG

BUSHKOPPIE WASTEWATER TREATMENT WORKS

INFRASTRUCTURE RENEWAL PLAN
MODULE 2 NEW BLOWER BUILDING
LIGHTING & SMALL POWER LAYOUT

DESIGN MANAGER

DATE: AUG 21

SCALE: 1:50

AMENDMENTS		APPROVED	DATE
T00	ISSUED FOR TENDER	DMcD	AUG 21
T01	ISSUED FOR TENDER	DMcD	MAR 24

DRAWING No.

JW NUMBER

CONSULTANT'S NUMBER
18056-73-12-149

FILE No
18056

T 0 1

LEGEND:

- C1 — 1.2m 46W IP65 POLYCARBONATE LED (NATURAL WHITE) LUMINAIRE.
- C2 — 1.2m 46W IP65 POLYCARBONATE LED (NATURAL WHITE) EMERGENCY LUMINAIRE (1 HOUR).
- B1 — 18W IP65 LED (NATURAL WHITE) OUTDOOR BULKHEAD.
- PHOTO CELL
- 2W — FLUSH MOUNTED 16A ONE LEVER TWO WAY SWITCH
- FLUSH MOUNTED 16A 3 PIN SWITCHED SOCKET OUTLET
- FLUSH MOUNTED DUO 16A 3 PIN SWITCHED SOCKET OUTLET
- SURFACE MOUTED 60A 5 PIN (ROUND) WELDING SOCKET OUTLET
- SURFACE MOUTED 30A 3 PHASE FAN ISOLATOR
- MCC ROOM PRESSURISING FAN

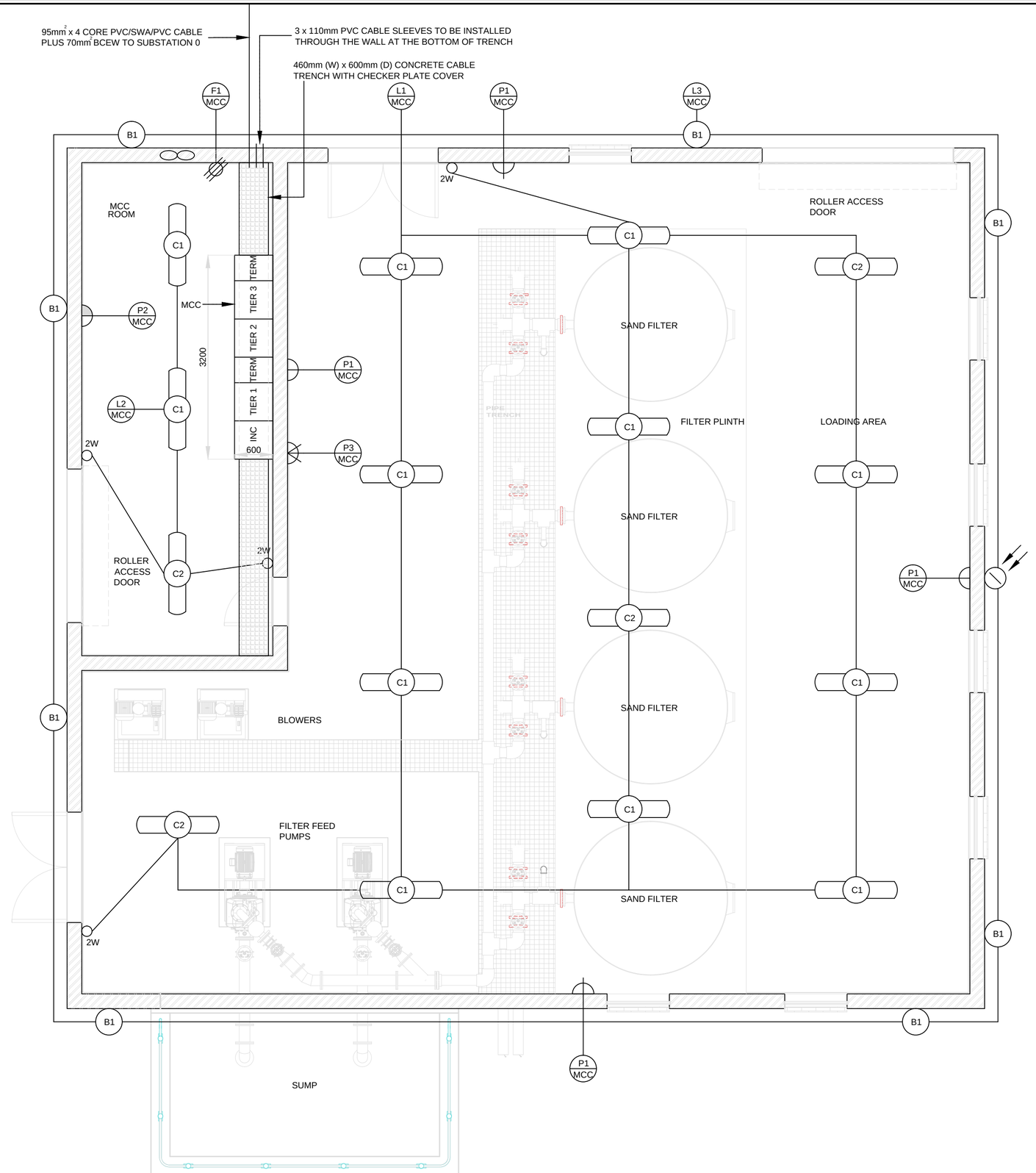

DEPARTMENT	APPROVED	DESIGNATION	DATE

CONSULTING ENGINEERS

ZITHOLELE CONSULTING

ZITHOLELE
P.O. BOX 6002
HALFWAY HOUSE
1685
TEL. 011-254 4800
FAX. 011-805 2100
EMAIL mail@zitholele.co.za

SURVEYED	
DESIGNED	DMcD
DRAWN	DMcD
CHECKED	
SERVICES CHECKED	
GEOTECHNICAL INVESTIGATION	
SERVITUDES	
APPROVED	DMcD
Pr. Eng. No.	200270017
DATE	AUGUST 2021

JOHANNESBURG WATER (PTY) LTD

Johannesburg Water

17 HARRISON STREET
MARSHALLTOWN
2107

TEL: (011) 688-1400
FAX: (011) 688-1529

CITY OF JOHANNESBURG

BUSHKOPPIE WASTEWATER TREATMENT WORKS

INFRASTRUCTURE RENEWAL PLAN
NEW WASH WATER FILTER STATION
LIGHTING & SMALL POWER LAYOUT

DESIGN MANAGER

DATE: AUG 21

SCALE: 1:50

AMENDMENTS		APPROVED	DATE
T00	ISSUED FOR TENDER	DMcD	AUG 21

DRAWING No.

JW NUMBER

CONSULTANT'S NUMBER
18056-73-12-150

FILE No
18056

T 0 0

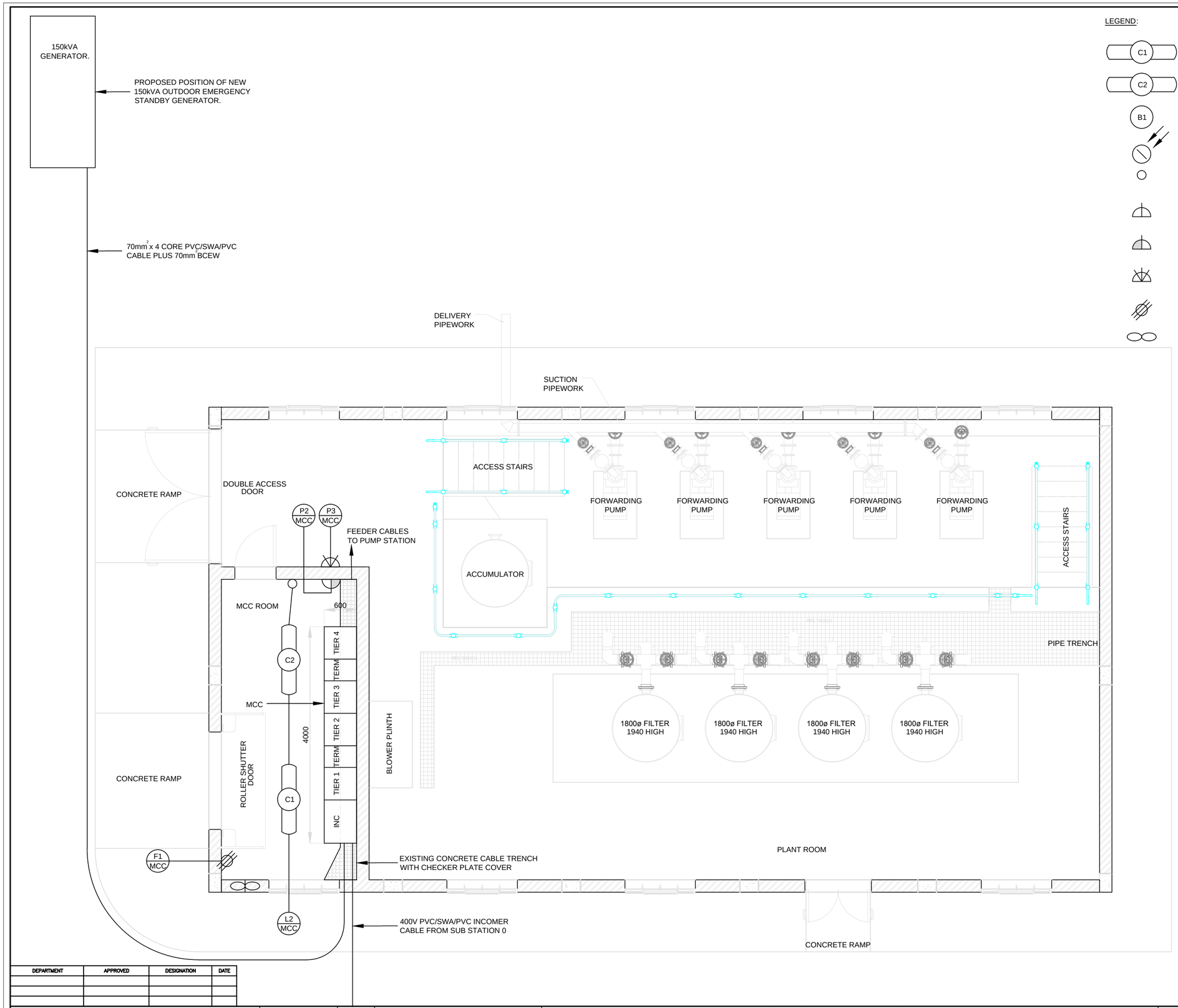

LEGEND:

- C1 — 1.2m 46W IP65 POLYCARBONATE LED (NATURAL WHITE) LUMINAIRE.
- C2 — 1.2m 46W IP65 POLYCARBONATE LED (NATURAL WHITE) EMERGENCY LUMINAIRE (1 HOUR).
- B1 — 18W IP65 LED (NATURAL WHITE) OUTDOOR BULKHEAD.
- PHOTO CELL
- SURFACE MOUNTED 16A ONE LEVER ONE WAY SWITCH
- SURFACE MOUNTED 16A 3 PIN SWITCHED SOCKET OUTLET
- SURFACE MOUNTED DUO 16A 3 PIN SWITCHED SOCKET OUTLET
- SURFACE MOUTED 60A 5 PIN (ROUND) WELDING SOCKET OUTLET
- SURFACE MOUTED 30A 3 PHASE FAN ISOLATOR
- MCC ROOM PRESSURISING FAN

DEPARTMENT	APPROVED	DESIGNATION	DATE

CONSULTING ENGINEERS

ZITHOLELE CONSULTING

ZITHOLELE
P.O. BOX 6002
HALFWAY HOUSE
1685
TEL. 011-254 4800
FAX. 011-805 2100
EMAIL mail@zitholele.co.za

SURVEYED	
DESIGNED	DMcD
DRAWN	DMcD
CHECKED	
SERVICES CHECKED	
GEOTECHNICAL INVESTIGATION	
SERVITUDES	
APPROVED	DMcD
Pr. Eng. No.	200270017
DATE	AUGUST 2021

JOHANNESBURG WATER (PTY) LTD

Johannesburg Water

17 HARRISON STREET
MARSHALLTOWN
2107

TEL: (011) 688-1400
FAX: (011) 688-1529

CITY OF JOHANNESBURG

BUSHKOPPIE WASTEWATER TREATMENT WORKS

INFRASTRUCTURE RENEWAL PLAN
EXISTING WASH WATER PUMP STATION
LIGHTING & SMALL POWER LAYOUT

DESIGN MANAGER

DATE: AUG 21

SCALE: 1:50

AMENDMENTS		APPROVED	DATE
T00	ISSUED FOR TENDER	DMcD	AUG 21

DRAWING No.

JW NUMBER

CONSULTANT'S NUMBER 18056-73-12-151

FILE No 18056

T 0 0

EXISTING LAYOUT

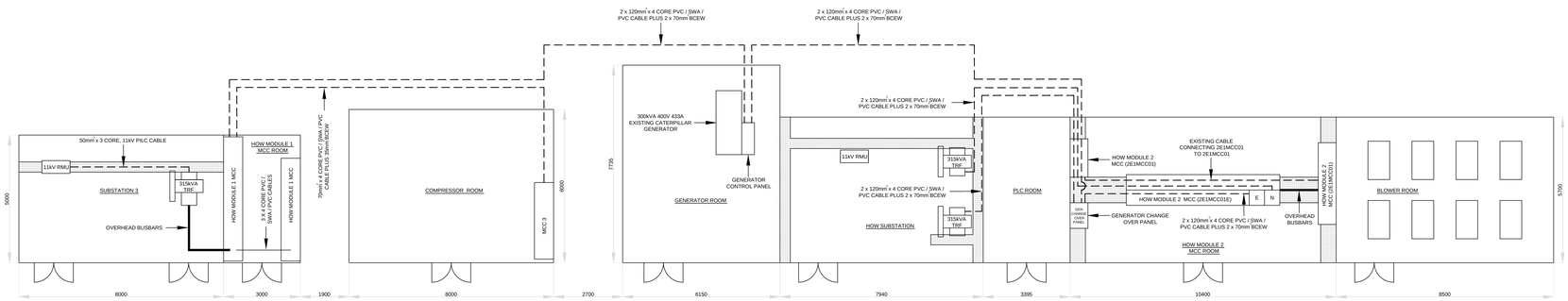

EXISTING SINGLE LINE

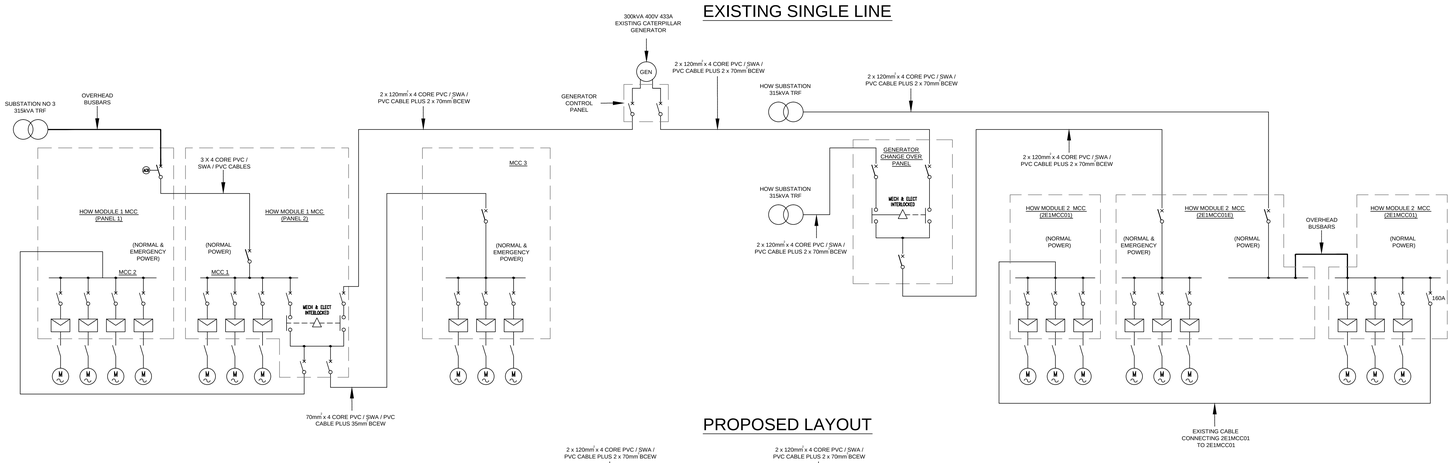

PROPOSED LAYOUT

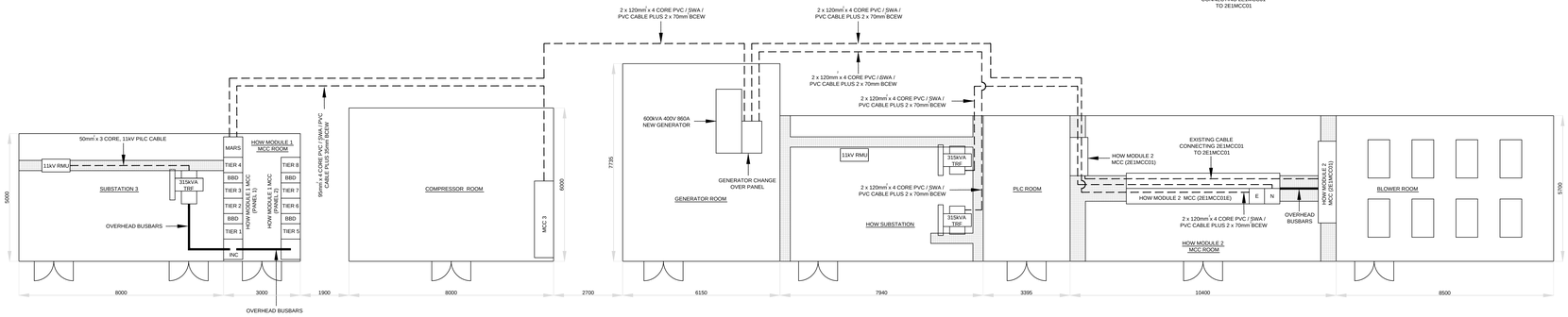

PROPOSED SINGLE LINE

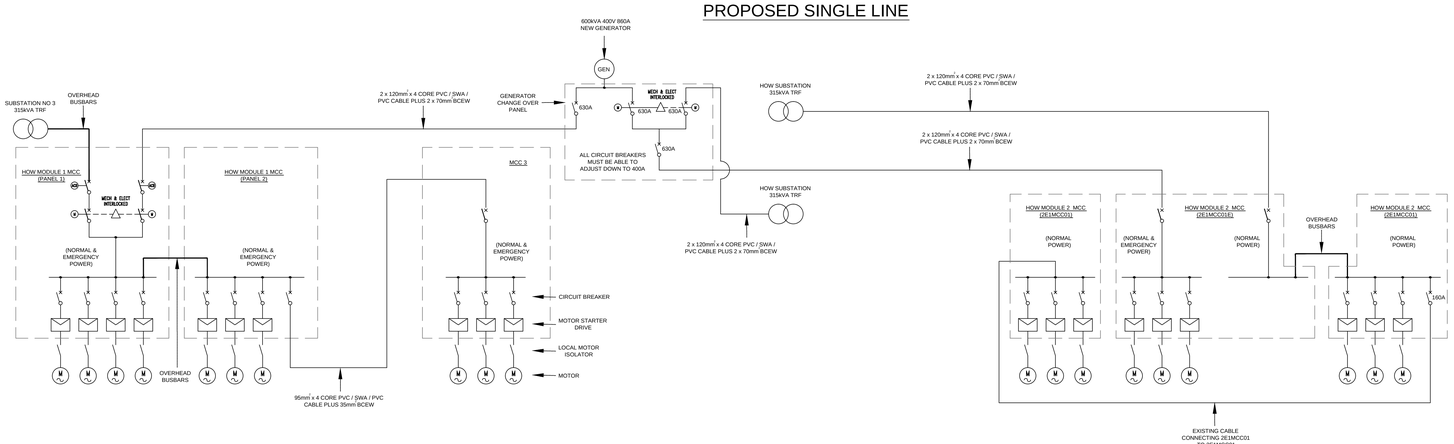

DEPARTMENT	APPROVED	DESIGNATION	DATE

CONSULTING ENGINEERS

ZITHOLELE CONSULTING

ZITHOLELE
P.O. BOX 6002
HALFWAY HOUSE
1685
TEL. 011-254 4800
FAX. 011-805 2100
EMAIL mail@zitholele.co.za

SURVEYED	
DESIGNED	DMcD
DRAWN	DMcD
CHECKED	
SERVICES CHECKED	
GEOTECHNICAL INVESTIGATION	
SERVITUDES	
APPROVED	DMcD
Pr. Eng. No.	200270017
DATE	FEBRUARY 2024

JOHANNESBURG WATER (PTY) LTD

Johannesburg Water

17 HARRISON STREET
MARSHALLTOWN
2107

TEL: (011) 688-1400
FAX: (011) 688-1529

CITY OF JOHANNESBURG

BUSHKOPPIE WASTEWATER TREATMENT WORKS

INFRASTRUCTURE RENEWAL PLAN
HOW LV RETICULATION

DESIGN MANAGER

DATE: FEB 24

SCALE
1:80

AMENDMENTS		APPROVED	DATE
T00	ISSUED FOR TENDER	DMcD	FEB 24
T01	ISSUED FOR TENDER	DMcD	MAR 24

DRAWING No.

JW NUMBER

CONSULTANT'S NUMBER
18056-73-12-152

FILE No
18056

T 0 1

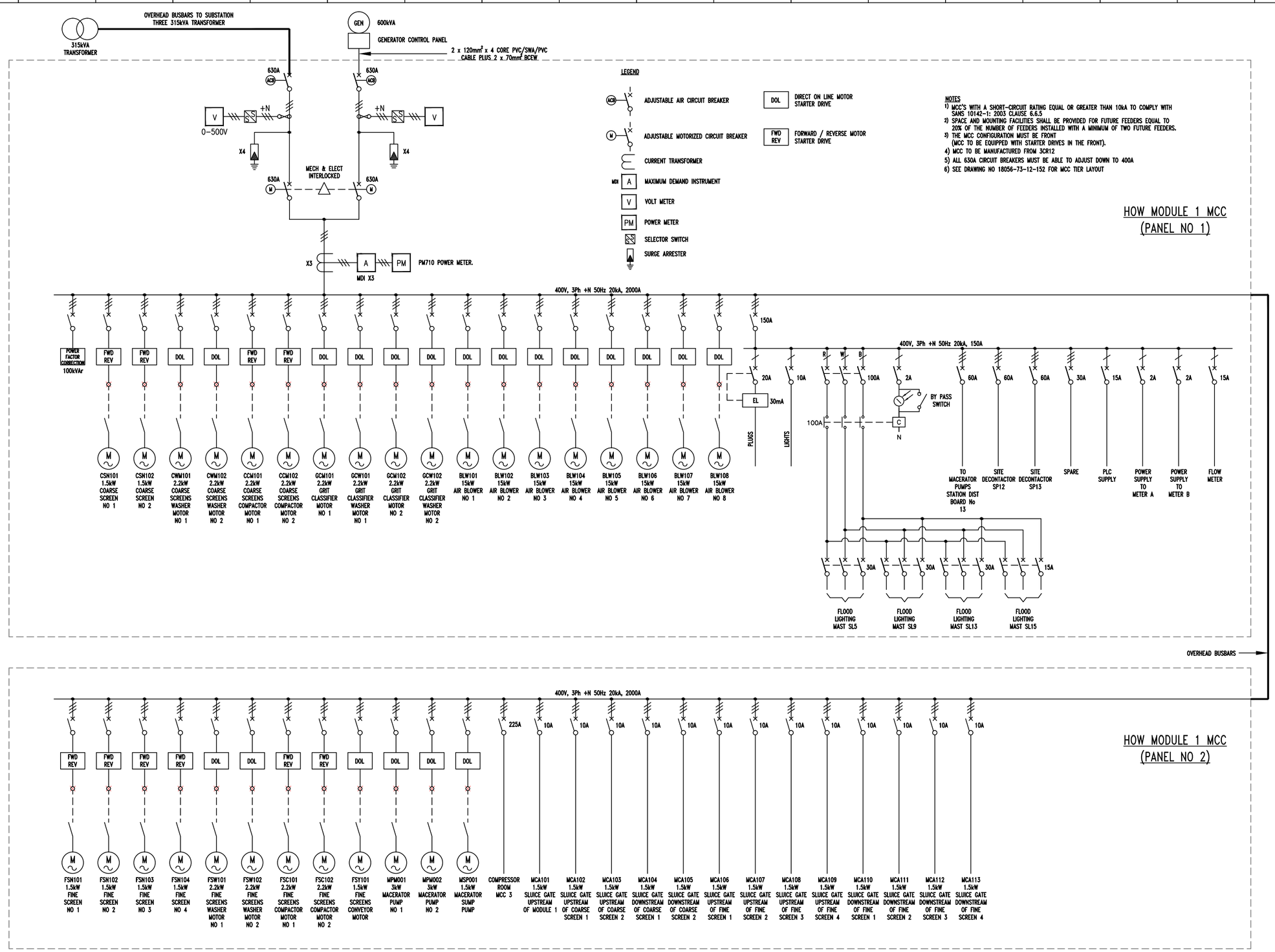

DEPARTMENT	APPROVED	DESIGNATION	DATE

CONSULTING ENGINEERS

ZITHOLELE CONSULTING

ZITHOLELE
P.O. BOX 6002
HALFWAY HOUSE
1685
TEL. 011-254 4800
FAX. 011-805 2100
EMAIL mail@zitholele.co.za

SURVEYED	
DESIGNED	DMcD
DRAWN	DMcD
CHECKED	
SERVICES CHECKED	
GEOTECHNICAL INVESTIGATION	
SERVITUDES	

APPROVED: DMcD
Pr. Eng. No: 200270017.
DATE: FEBRUARY 2024

JOHANNESBURG WATER (PTY) LTD

Johannesburg Water

17 HARRISON STREET
MARSHALLTOWN
2107

TEL: (011) 688-1400
FAX: (011) 688-1529

CITY OF JOHANNESBURG

BUSHKOPPIE WASTEWATER TREATMENT WORKS

INFRASTRUCTURE RENEWAL PLAN
HOW MODULE 1 MCC
SINGLE LINE DIAGRAM

DESIGN MANAGER

DATE: FEB 24

SCALE: NTS

AMENDMENTS	APPROVED	DATE
T00 ISSUED FOR TENDER	DMcD	MAR 24

DRAWING No.
JW NUMBER
CONSULTANT'S NUMBER 18056-73-12-153
FILE No 18056
T 0 0

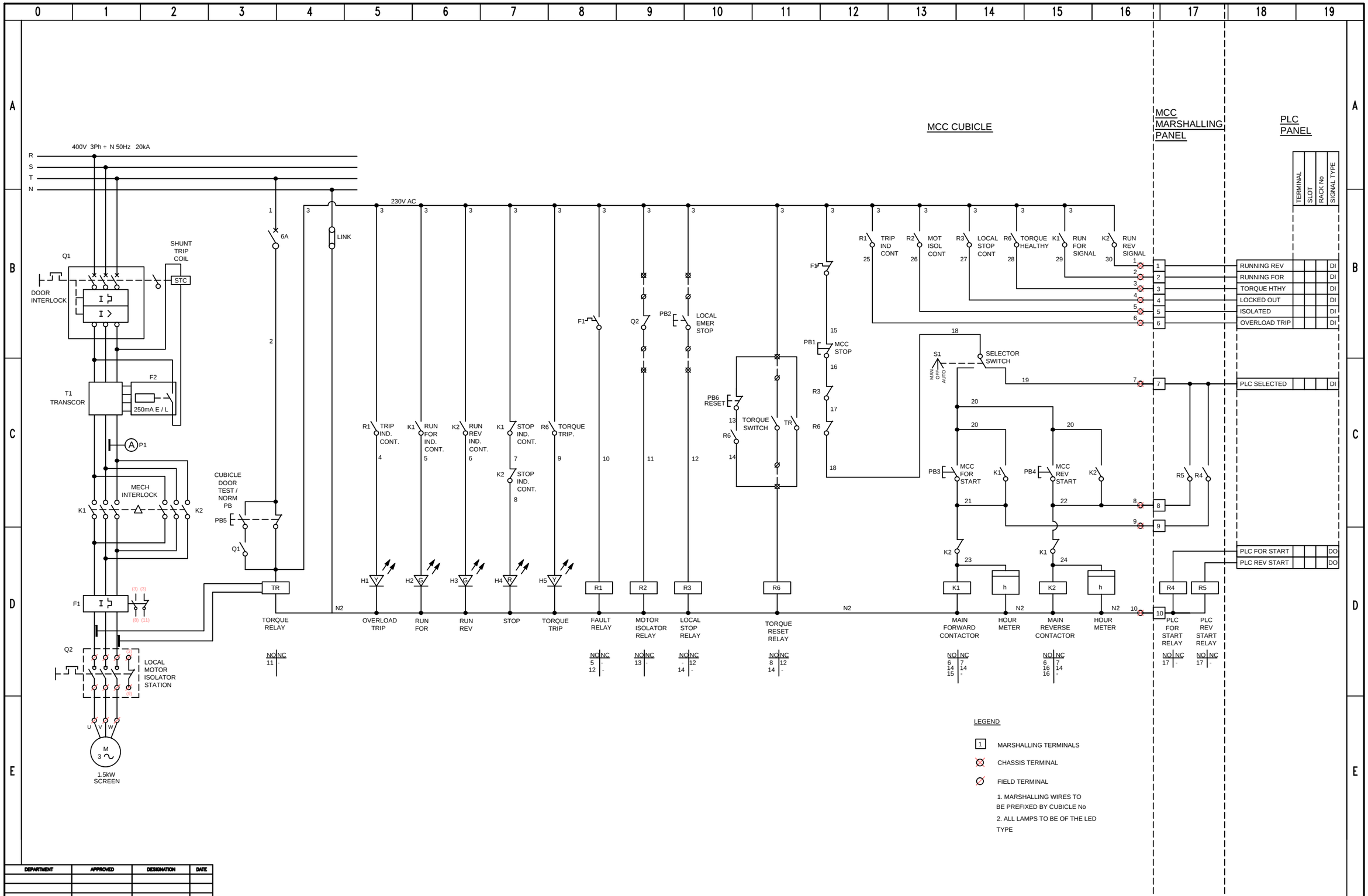

DEPARTMENT	APPROVED	DESIGNATION	DATE

CONSULTING ENGINEERS

ZITHOLELE CONSULTING

ZITHOLELE
P.O. BOX 6002
HALFWAY HOUSE
1685
TEL. 011-254 4800
FAX. 011-805 2100
EMAIL mail@zitholele.co.za

SURVEYED	
DESIGNED	DMcD
DRAWN	DMcD
CHECKED	
SERVICES CHECKED	
GEOTECHNICAL INVESTIGATION	
SERVITUDES	

APPROVED: DMcD
Pr. Eng. No: 200270017.
DATE: AUGUST 2021

JOHANNESBURG WATER (PTY) LTD

Johannesburg Water

17 HARRISON STREET
MARSHALLTOWN
2107

TEL: (011) 688-1400
FAX: (011) 688-1529

CITY OF JOHANNESBURG

BUSHKOPPIE WASTEWATER TREATMENT WORKS

INFRASTRUCTURE RENEWAL PLAN
HOW TYPICAL 1.5kW SCREEN
FORWARD / REVERSE STARTER DRIVE SCHEMATIC

DESIGN MANAGER

DATE: AUG 21

SCALE: NTS

AMENDMENTS		APPROVED	DATE
T00	ISSUED FOR TENDER	DMcD	MAR 24

DRAWING No.

JW NUMBER

CONSULTANT'S NUMBER
18056-73-12-154

FILE No
18056

T 0 0

BUSHKOPPIE WWTW IRP: 400V POWER CABLE SCHEDULES

DRG NO: 18056-73-12-155 SHT 1 OF 26 **(HOW Module 1 MCC)** REV: T00 MARCH 2024

CABLE NO	CABLE FED FROM	CABLE FEEDING TO	SIZE IN mm^2	NO OF CORES	TYPE	SEPARATE EARTH	EST LENGTH	LOAD Kw
HOW/M1/001/P/001	HOW MODULE 1 MCC	GENERATOR CHANGE OVER PANEL	2 x 120	4	PVC / SWA / PVC	2 x 70	43	
HOW/M1/002/P/001	HOW MODULE 1 MCC	Compressor Room MCC 3	95	4	PVC / SWA / PVC	35	33	
HOW/M2/001/P/001 EMERGENCY	HOW MODULE 2 315kVATRF **No 2**	GENERATOR CHANGE OVER PANEL	2 x 120	4	PVC / SWA / PVC	2 x 70	31	
HOW/M2/002/P/001 EMERGENCY	GENERATOR CHANGE OVER PANEL	HOW MODULE 2 MCC (2E1MCC01E)	2 x 120	4	PVC / SWA / PVC	2 x 70	34	
HOW/M2/003/P/001	HOW MODULE 2 315kVATRF **No 1**	HOW MODULE 2 MCC (2E1MCC01E)	2 x 120	4	PVC / SWA / PVC	2 x 70	31	
HOW/M2/004/P/001 EMERGENCY	HOW MODULE 2 MCC (2E1MCC01E) (GENERATOR SUPPLY)	NEW BLOWER ROOM MCC	150	4	PVC / SWA / PVC	70	170	
HOW/M2/005/P/001 NORMAL POWER	HOW MODULE 2 MCC (2E1MCC01) TRANSFORMER SUPPLY	NEW BLOWER ROOM MCC	150	4	PVC / SWA / PVC	70	170	
HOW/M1/003/P/001	HOW MODULE 1 MCC (FWD / REV)	LOCAL ISOLATOR COARSE SCREEN NO 1 CSN101	2.5	4	PVC / SWA / PVC	4th core	150	1.5
HOW/M1/003/P/002	LOCAL ISOLATOR COARSE SCREEN NO 1 CSN101	MOTOR COARSE SCREEN NO 1 CSN101	2.5	4	PVC / SWA / PVC	4th core	5	1.5
HOW/M1/004/P/001	HOW MODULE 1 MCC (FWD / REV)	LOCAL ISOLATOR COARSE SCREEN NO 2 CSN102	2.5	4	PVC / SWA / PVC	4th core	150	1.5
HOW/M1/004/P/002	LOCAL ISOLATOR COARSE SCREEN NO 2 CSN102	MOTOR COARSE SCREEN NO 2 CSN102	2.5	4	PVC / SWA / PVC	4th core	5	1.5
HOW/M1/005/P/001	HOW MODULE 1 MCC	LOCAL ISOLATOR COARSE SCREEN WASHER NO 1 CWM101	2.5	4	PVC / SWA / PVC	4th core	150	2.2
HOW/M1/005/P/002	LOCAL ISOLATOR COARSE SCREEN WASHER NO 1 CWM101	MOTOR COARSE SCREEN WASHER NO 1 CWM101	2.5	4	PVC / SWA / PVC	4th core	5	2.2

BUSHKOPPIE WWTW IRP: 400V POWER CABLE SCHEDULES

DRG NO: 18056-73-12-155 SHT 2 OF 26 **(HOW Module 1 MCC)** REV: T00 MARCH 2024

CABLE NO	CABLE FED FROM	CABLE FEEDING TO	SIZE IN mm^2	NO OF CORES	TYPE	SEPARATE EARTH	EST LENGTH	LOAD Kw
HOW/M1/006/P/001	HOW MODULE 1 MCC	LOCAL ISOLATOR COARSE SCREEN WASHER NO 2 CWM102	2.5	4	PVC / SWA / PVC	4th core	150	2.2
HOW/M1/006/P/002	LOCAL ISOLATOR COARSE SCREEN WASHER NO 2 CWM102	MOTOR COARSE SCREEN WASHER NO 2 CWM102	2.5	4	PVC / SWA / PVC	4th core	5	2.2
HOW/M1/007/P/001	HOW MODULE 1 MCC (FWD / REV)	LOCAL ISOLATOR COARSE SCREEN COMPACTOR NO 1 CCM101	2.5	4	PVC / SWA / PVC	4th core	150	2.2
HOW/M1/007/P/002	LOCAL ISOLATOR COARSE SCREEN COMPACTOR NO 1 CCM101	MOTOR COARSE SCREEN COMPACTOR NO 1 CCM101	2.5	4	PVC / SWA / PVC	4th core	5	2.2
HOW/M1/008/P/001	HOW MODULE 1 MCC (FWD / REV)	LOCAL ISOLATOR COARSE SCREEN COMPACTOR NO 2 CCM102	2.5	4	PVC / SWA / PVC	4th core	150	2.2
HOW/M1/008/P/002	LOCAL ISOLATOR COARSE SCREEN COMPACTOR NO 2 CCM102	MOTOR COARSE SCREEN COMPACTOR NO 2 CCM102	2.5	4	PVC / SWA / PVC	4th core	5	2.2
HOW/M1/009/P/001	HOW MODULE 1 MCC	LOCAL ISOLATOR GRIT CLASSIFIER NO 1 GCM101	2.5	4	PVC / SWA / PVC	4th core	100	2.2
HOW/M1/009/P/002	LOCAL ISOLATOR GRIT CLASSIFIER NO 1 GCM101	MOTOR GRIT CLASSIFIER NO 1 GCM101	2.5	4	PVC / SWA / PVC	4th core	5	2.2
HOW/M1/010/P/001	HOW MODULE 1 MCC	LOCAL ISOLATOR GRIT CLASSIFIER WASHER NO 1 GCW101	2.5	4	PVC / SWA / PVC	4th core	100	2.2
HOW/M1/010/P/002	LOCAL ISOLATOR GRIT CLASSIFIER WASHER NO 1 GCW101	MOTOR GRIT CLASSIFIER WASHER NO 1 GCW101	2.5	4	PVC / SWA / PVC	4th core	5	2.2
HOW/M1/011/P/001	HOW MODULE 1 MCC	LOCAL ISOLATOR GRIT CLASSIFIER NO 2 GCM102	2.5	4	PVC / SWA / PVC	4th core	100	2.2
HOW/M1/011/P/002	LOCAL ISOLATOR GRIT CLASSIFIER NO 2 GCM102	MOTOR GRIT CLASSIFIER NO 2 GCM102	2.5	4	PVC / SWA / PVC	4th core	5	2.2

BUSHKOPPIE WWTW IRP: 400V POWER CABLE SCHEDULES

DRG NO: 18056-73-12-155 SHT 3 OF 26 **(HOW Module 1 MCC)** REV: T00 MARCH 2024

CABLE NO	CABLE FED FROM	CABLE FEEDING TO	SIZE IN mm^2	NO OF CORES	TYPE	SEPARATE EARTH	EST LENGTH	LOAD Kw
HOW/M1/012/P/001	HOW MODULE 1 MCC	LOCAL ISOLATOR GRIT CLASSIFIER WASHER NO 2 GCW102	2.5	4	PVC / SWA / PVC	4th core	100	2.2
HOW/M1/012/P/002	LOCAL ISOLATOR GRIT CLASSIFIER WASHER NO 2 GCW102	MOTOR GRIT CLASSIFIER WASHER NO 2 GCW102	2.5	4	PVC / SWA / PVC	4th core	5	2.2
HOW/M1/013/P/001	HOW MODULE 1 MCC	LOCAL ISOLATOR AIR BLOWER NO 1	6	4	PVC / SWA / PVC	4th core	72	15
HOW/M1/013/P/002	LOCAL ISOLATOR AIR BLOWER NO 1	MOTOR AIR BLOWER NO 1	6	4	PVC / SWA / PVC	4th core	5	15
HOW/M1/014/P/001	HOW MODULE 1 MCC	LOCAL ISOLATOR AIR BLOWER NO 2	6	4	PVC / SWA / PVC	4th core	72	15
HOW/M1/014/P/002	LOCAL ISOLATOR AIR BLOWER NO 2	MOTOR AIR BLOWER NO 2	6	4	PVC / SWA / PVC	4th core	5	15
HOW/M1/015/P/001	HOW MODULE 1 MCC	LOCAL ISOLATOR AIR BLOWER NO 3	6	4	PVC / SWA / PVC	4th core	72	15
HOW/M1/015/P/002	LOCAL ISOLATOR AIR BLOWER NO 3	MOTOR AIR BLOWER NO 3	6	4	PVC / SWA / PVC	4th core	5	15
HOW/M1/016/P/001	HOW MODULE 1 MCC	LOCAL ISOLATOR AIR BLOWER NO 4	6	4	PVC / SWA / PVC	4th core	72	15
HOW/M1/016/P/002	LOCAL ISOLATOR AIR BLOWER NO 4	MOTOR AIR BLOWER NO 4	6	4	PVC / SWA / PVC	4th core	5	15
HOW/M1/017/P/001	HOW MODULE 1 MCC	LOCAL ISOLATOR AIR BLOWER NO 5	6	4	PVC / SWA / PVC	4th core	72	15
HOW/M1/017/P/002	LOCAL ISOLATOR AIR BLOWER NO 5	MOTOR AIR BLOWER NO 5	6	4	PVC / SWA / PVC	4th core	5	15

BUSHKOPPIE WWTW IRP: 400V POWER CABLE SCHEDULES

DRG NO: 18056-73-12-155 SHT 4 OF 26 **(HOW Module 1 MCC)** REV: T00 MARCH 2024

CABLE NO	CABLE FED FROM	CABLE FEEDING TO	SIZE IN mm^2	NO OF CORES	TYPE	SEPARATE EARTH	EST LENGTH	LOAD Kw
HOW/M1/018/P/001	HOW MODULE 1 MCC	LOCAL ISOLATOR AIR BLOWER NO 6	6	4	PVC / SWA / PVC	4th core	72	15
HOW/M1/018/P/002	LOCAL ISOLATOR AIR BLOWER NO 6	MOTOR AIR BLOWER NO 6	6	4	PVC / SWA / PVC	4th core	5	15
HOW/M1/019/P/001	HOW MODULE 1 MCC	LOCAL ISOLATOR AIR BLOWER NO 7	6	4	PVC / SWA / PVC	4th core	72	15
HOW/M1/019/P/002	LOCAL ISOLATOR AIR BLOWER NO 7	MOTOR AIR BLOWER NO 7	6	4	PVC / SWA / PVC	4th core	5	15
HOW/M1/020/P/001	HOW MODULE 1 MCC	LOCAL ISOLATOR AIR BLOWER NO 8	6	4	PVC / SWA / PVC	4th core	72	15
HOW/M1/020/P/002	LOCAL ISOLATOR AIR BLOWER NO 8	MOTOR AIR BLOWER NO 8	6	4	PVC / SWA / PVC	4th core	5	15
HOW/M1/021/P/001	HOW MODULE 1 MCC (FWD / REV)	LOCAL ISOLATOR FINE SCREEN NO 1 FSN101	2.5	4	PVC / SWA / PVC	4th core	120	1.5
HOW/M1/021/P/002	LOCAL ISOLATOR FINE SCREEN NO 1 FSN101	MOTOR FINE SCREEN NO 1 FSN101	2.5	4	PVC / SWA / PVC	4th core	5	1.5
HOW/M1/022/P/001	HOW MODULE 1 MCC (FWD / REV)	LOCAL ISOLATOR FINE SCREEN NO 2 FSN102	2.5	4	PVC / SWA / PVC	4th core	120	1.5
HOW/M1/022/P/002	LOCAL ISOLATOR FINE SCREEN NO 2 FSN102	MOTOR FINE SCREEN NO 2 FSN102	2.5	4	PVC / SWA / PVC	4th core	5	1.5
HOW/M1/023/P/001	HOW MODULE 1 MCC (FWD / REV)	LOCAL ISOLATOR FINE SCREEN NO 3 FSN103	2.5	4	PVC / SWA / PVC	4th core	120	1.5
HOW/M1/023/P/002	LOCAL ISOLATOR FINE SCREEN NO 3 FSN103	MOTOR FINE SCREEN NO 3 FSN103	2.5	4	PVC / SWA / PVC	4th core	5	1.5

BUSHKOPPIE WWTW IRP: 400V POWER CABLE SCHEDULES

DRG NO: 18056-73-12-155 SHT 5 OF 26 **(HOW Module 1 MCC)** REV: T00 MARCH 2024

CABLE NO	CABLE FED FROM	CABLE FEEDING TO	SIZE IN mm^2	NO OF CORES	TYPE	SEPARATE EARTH	EST LENGTH	LOAD Kw
HOW/M1/024/P/001	HOW MODULE 1 MCC (FWD / REV)	LOCAL ISOLATOR FINE SCREEN NO 4 FSN104	2.5	4	PVC / SWA / PVC	4th core	120	1.5
HOW/M1/024/P/002	LOCAL ISOLATOR FINE SCREEN NO 4 FSN104	MOTOR FINE SCREEN NO 4 FSN104	2.5	4	PVC / SWA / PVC	4th core	5	1.5
HOW/M1/025/P/001	HOW MODULE 1 MCC	LOCAL ISOLATOR FINE SCREEN WASHER NO 1 FSW101	2.5	4	PVC / SWA / PVC	4th core	120	2.2
HOW/M1/025/P/002	LOCAL ISOLATOR FINE SCREEN WASHER NO 1 FSW101	MOTOR FINE SCREEN WASHER NO 1 FSW101	2.5	4	PVC / SWA / PVC	4th core	5	2.2
HOW/M1/026/P/001	HOW MODULE 1 MCC	LOCAL ISOLATOR FINE SCREEN WASHER NO 2 FSW102	2.5	4	PVC / SWA / PVC	4th core	120	2.2
HOW/M1/026/P/002	LOCAL ISOLATOR FINE SCREEN WASHER NO 2 FSW102	MOTOR FINE SCREEN WASHER NO 2 FSW102	2.5	4	PVC / SWA / PVC	4th core	5	2.2
HOW/M1/027/P/001	HOW MODULE 1 MCC (FWD / REV)	LOCAL ISOLATOR FINE SCREEN COMPACTOR NO 1 FSC101	2.5	4	PVC / SWA / PVC	4th core	120	2.2
HOW/M1/027/P/002	LOCAL ISOLATOR FINE SCREEN COMPACTOR NO 1 FSC101	MOTOR FINE SCREEN COMPACTOR NO 1 FSC101	2.5	4	PVC / SWA / PVC	4th core	5	2.2
HOW/M1/028/P/001	HOW MODULE 1 MCC (FWD / REV)	LOCAL ISOLATOR FINE SCREEN COMPACTOR NO 2 FSC102	2.5	4	PVC / SWA / PVC	4th core	120	2.2
HOW/M1/028/P/002	LOCAL ISOLATOR FINE SCREEN COMPACTOR NO 2 FSC102	MOTOR FINE SCREEN COMPACTOR NO 2 FSC102	2.5	4	PVC / SWA / PVC	4th core	5	2.2
HOW/M1/029/P/001	HOW MODULE 1 MCC	LOCAL ISOLATOR FINE SCREEN CONVEYOR FSY101	2.5	4	PVC / SWA / PVC	4th core	120	1.5
HOW/M1/029/P/002	LOCAL ISOLATOR FINE SCREEN CONVEYOR FSY101	MOTOR FINE SCREEN CONVEYOR FSY101	2.5	4	PVC / SWA / PVC	4th core	5	1.5

BUSHKOPPIE WWTW IRP: 400V POWER CABLE SCHEDULES

DRG NO: 18056-73-12-155 SHT 6 OF 26 **(HOW Module 1 MCC)** REV: T00 MARCH 2024

CABLE NO	CABLE FED FROM	CABLE FEEDING TO	SIZE IN mm^2	NO OF CORES	TYPE	SEPARATE EARTH	EST LENGTH	LOAD Kw
HOW/M1/030/P/001	HOW MODULE 1 MCC	LOCAL ISOLATOR MACERATOR NO 1 MPM001	2.5	4	PVC / SWA / PVC	4th core	120	3
HOW/M1/030/P/002	LOCAL ISOLATOR MACERATOR NO 1 MPM001	MOTOR MACERATOR NO 1 MPM001	2.5	4	PVC / SWA / PVC	4th core	5	3
HOW/M1/031/P/001	HOW MODULE 1 MCC	LOCAL ISOLATOR MACERATOR NO 2 MPM002	2.5	4	PVC / SWA / PVC	4th core	120	3
HOW/M1/031/P/002	LOCAL ISOLATOR MACERATOR NO 2 MPM002	MOTOR MACERATOR NO 2 MPM002	2.5	4	PVC / SWA / PVC	4th core	5	3
HOW/M1/032/P/001	HOW MODULE 1 MCC	LOCAL ISOLATOR MACERATOR SUMP PUMP MSP001	2.5	4	PVC / SWA / PVC	4th core	120	1.5
HOW/M1/032/P/002	LOCAL ISOLATOR MACERATOR SUMP PUMP MSP001	MOTOR MACERATOR SUMP PUMP MSP001	2.5	4	PVC / SWA / PVC	4th core	5	1.5
HOW/M1/033/P/001	HOW MODULE 1 MCC	SLUICE GATE UPSTREAM OF MODULE 1 ACTUATOR MCA101	2.5	4	PVC / SWA / PVC	4th core	120	1.5
HOW/M1/034/P/001	HOW MODULE 1 MCC	SLUICE GATE UPSTREAM OF COARSE SCREEN 1 ACTUATOR MCA102	2.5	4	PVC / SWA / PVC	4th core	120	1.5
HOW/M1/035/P/001	HOW MODULE 1 MCC	SLUICE GATE UPSTREAM OF COARSE SCREEN 2 ACTUATOR MCA103	2.5	4	PVC / SWA / PVC	4th core	120	1.5
HOW/M1/036/P/001	HOW MODULE 1 MCC	SLUICE GATE DWSTREAM OF COARSE SCREEN 1 ACTUATOR MCA104	2.5	4	PVC / SWA / PVC	4th core	120	1.5
HOW/M1/037/P/001	HOW MODULE 1 MCC	SLUICE GATE DWSTREAM OF COARSE SCREEN 2 ACTUATOR MCA105	2.5	4	PVC / SWA / PVC	4th core	120	1.5
HOW/M1/038/P/001	HOW MODULE 1 MCC	SLUICE GATE UPSTREAM OF FINE SCREEN 1 ACTUATOR MCA106	2.5	4	PVC / SWA / PVC	4th core	120	1.5

BUSHKOPPIE WWTW IRP: 400V POWER CABLE SCHEDULES

DRG NO: 18056-73-12-155 SHT 7 OF 26 **(HOW Module 1 MCC)** REV: T00 MARCH 2024

CABLE NO	CABLE FED FROM	CABLE FEEDING TO	SIZE IN mm^2	NO OF CORES	TYPE	SEPARATE EARTH	EST LENGTH	LOAD Kw
HOW/M1/039/P/001	HOW MODULE 1 MCC	SLUICE GATE UPSTREAM OF FINE SCREEN 2 ACTUATOR MCA107	2.5	4	PVC / SWA / PVC	4th core	120	1.5
HOW/M1/040/P/001	HOW MODULE 1 MCC	SLUICE GATE UPSTREAM OF FINE SCREEN 3 ACTUATOR MCA108	2.5	4	PVC / SWA / PVC	4th core	120	1.5
HOW/M1/041/P/001	HOW MODULE 1 MCC	SLUICE GATE UPSTREAM OF FINE SCREEN 4 ACTUATOR MCA109	2.5	4	PVC / SWA / PVC	4th core	120	1.5
HOW/M1/042/P/001	HOW MODULE 1 MCC	SLUICE GATE DWSTREAM OF FINE SCREEN 1 ACTUATOR MCA110	2.5	4	PVC / SWA / PVC	4th core	120	1.5
HOW/M1/043/P/001	HOW MODULE 1 MCC	SLUICE GATE DWSTREAM OF FINE SCREEN 2 ACTUATOR MCA111	2.5	4	PVC / SWA / PVC	4th core	120	1.5
HOW/M1/044/P/001	HOW MODULE 1 MCC	SLUICE GATE DWSTREAM OF FINE SCREEN 3 ACTUATOR MCA112	2.5	4	PVC / SWA / PVC	4th core	120	1.5
HOW/M1/045/P/001	HOW MODULE 1 MCC	SLUICE GATE DWSTREAM OF FINE SCREEN 4 ACTUATOR MCA113	2.5	4	PVC / SWA / PVC	4th core	120	1.5

BUSHKOPPIE WWTW IRP: 400V POWER CABLE SCHEDULES

DRG NO: 18056-73-12-155 SHT 8 OF 26 **(HOW Module 2 MCC)** REV: T00 MARCH 2024

CABLE NO	CABLE FED FROM	CABLE FEEDING TO	SIZE IN mm^2	NO OF CORES	TYPE	SEPARATE EARTH	EST LENGTH	LOAD Kw
HOW/M2/006/P/001	HOW MODULE 2 MCC	LOCAL ISOLATOR GRIT CLASSIFIER NO 1 GCM201	2.5	4	PVC / SWA / PVC	4th core	100	2.2
HOW/M2/006/P/002	LOCAL ISOLATOR GRIT CLASSIFIER NO 1 GCM201	MOTOR GRIT CLASSIFIER NO 1 GCM201	2.5	4	PVC / SWA / PVC	4th core	5	2.2
HOW/M2/007/P/001	HOW MODULE 2 MCC	LOCAL ISOLATOR GRIT CLASSIFIER WASHER NO 1 GCW201	2.5	4	PVC / SWA / PVC	4th core	100	2.2
HOW/M2/007/P/002	LOCAL ISOLATOR GRIT CLASSIFIER WASHER NO 1 GCW201	MOTOR GRIT CLASSIFIER WASHER NO 1 GCW201	2.5	4	PVC / SWA / PVC	4th core	5	2.2
HOW/M2/008/P/001	HOW MODULE 2 MCC	LOCAL ISOLATOR GRIT CLASSIFIER NO 2 GCM202	2.5	4	PVC / SWA / PVC	4th core	100	2.2
HOW/M2/008/P/002	LOCAL ISOLATOR GRIT CLASSIFIER NO 2 GCM202	MOTOR GRIT CLASSIFIER NO 2 GCM202	2.5	4	PVC / SWA / PVC	4th core	5	2.2
HOW/M2/009/P/001	HOW MODULE 2 MCC	LOCAL ISOLATOR GRIT CLASSIFIER WASHER NO 2 GCW202	2.5	4	PVC / SWA / PVC	4th core	100	2.2
HOW/M2/009/P/002	LOCAL ISOLATOR GRIT CLASSIFIER WASHER NO 2 GCW202	MOTOR GRIT CLASSIFIER WASHER NO 2 GCW202	2.5	4	PVC / SWA / PVC	4th core	5	2.2
HOW/M2/010/P/001	HOW MODULE 2 MCC	LOCAL ISOLATOR GRIT CONVEYOR GCY201	2.5	4	PVC / SWA / PVC	4th core	100	2.2
HOW/M2/010/P/002	LOCAL ISOLATOR GRIT CONVEYOR GCY201	MOTOR GRIT CONVEYOR GCY201	2.5	4	PVC / SWA / PVC	4th core	5	2.2
HOW/M2/011/P/001	HOW MODULE 2 MCC	LOCAL ISOLATOR GRIT BIN SELECTOR GBS201	2.5	4	PVC / SWA / PVC	4th core	100	2.2
HOW/M2/011/P/002	LOCAL ISOLATOR GRIT BIN SELECTOR GBS201	MOTOR GRIT BIN SELECTOR GBS201	2.5	4	PVC / SWA / PVC	4th core	5	2.2

BUSHKOPPIE WWTW IRP: 400V POWER CABLE SCHEDULES

DRG NO: 18056-73-12-155 SHT 9 OF 26 **(HOW Module 2 MCC)** REV: T00 MARCH 2024

CABLE NO	CABLE FED FROM	CABLE FEEDING TO	SIZE IN mm^2	NO OF CORES	TYPE	SEPARATE EARTH	EST LENGTH	LOAD Kw
HOW/M2/012/P/001	HOW MODULE 2 MCC	LOCAL ISOLATOR GRIT BIN TROLLEY NO 1 GBD201	2.5	4	PVC / SWA / PVC	4th core	100	2.2
HOW/M2/012/P/002	LOCAL ISOLATOR GRIT BIN TROLLEY NO 1 GBD201	MOTOR GRIT BIN TROLLEY NO 1 GBD201	2.5	4	PVC / SWA / PVC	4th core	5	2.2
HOW/M2/013/P/001	HOW MODULE 2 MCC	LOCAL ISOLATOR GRIT BIN TROLLEY NO 2 GBD202	2.5	4	PVC / SWA / PVC	4th core	100	2.2
HOW/M2/013/P/002	LOCAL ISOLATOR GRIT BIN TROLLEY NO 2 GBD202	MOTOR GRIT BIN TROLLEY NO 2 GBD202	2.5	4	PVC / SWA / PVC	4th core	5	2.2
HOW/M2/014/P/001	HOW MODULE 2 MCC	LOCAL ISOLATOR GRIT BIN TROLLEY NO 3 GBD203	2.5	4	PVC / SWA / PVC	4th core	100	2.2
HOW/M2/014/P/002	LOCAL ISOLATOR GRIT BIN TROLLEY NO 3 GBD203	MOTOR GRIT BIN TROLLEY NO 3 GBD203	2.5	4	PVC / SWA / PVC	4th core	5	2.2

BUSHKOPPIE WWTW IRP: 400V POWER CABLE SCHEDULES

DRG NO: 18056-73-12-155 SHT 10 OF 26 **(HOW Module 1 Compressor MCC)** REV: T00 MARCH 2024

CABLE NO	CABLE FED FROM	CABLE FEEDING TO	SIZE IN mm^2	NO OF CORES	TYPE	SEPARATE EARTH	EST LENGTH	LOAD Kw
CMP/M1/001/P/001	COMPRESSOR M1 MCC	LOCAL ISOLATOR COMPRESSOR NO 1 CMP101	6	4	PVC / SWA / PVC	4th core	10	15
CMP/M1/001/P/002	LOCAL ISOLATOR COMPRESSOR NO 1 CMP101	MOTOR COMPRESSOR NO 1 CMP101	6	4	PVC / SWA / PVC	4th core	5	15
CMP/M1/002/P/001	COMPRESSOR M1 MCC	LOCAL ISOLATOR COMPRESSOR NO 2 CMP102	6	4	PVC / SWA / PVC	4th core	10	15
CMP/M1/002/P/002	LOCAL ISOLATOR COMPRESSOR NO 2 CMP102	MOTOR COMPRESSOR NO 2 CMP102	6	4	PVC / SWA / PVC	4th core	5	15

BUSHKOPPIE WWTW IRP: 400V POWER CABLE SCHEDULES

DRG NO: 18056-73-12-155 SHT 11 OF 26 **(M2 New Blower Room MCC)** REV: T00 MARCH 2024

CABLE NO	CABLE FED FROM	CABLE FEEDING TO	SIZE IN mm^2	NO OF CORES	TYPE	SEPARATE EARTH	EST LENGTH	LOAD Kw
BLW/M2/001/P/001	NEW BLOWER ROOM MCC	LOCAL ISOLATOR AIR BLOWER NO 1 BLW201	6	4	PVC / SWA / PVC	4th core	13	15
BLW/M2/001/P/002	LOCAL ISOLATOR AIR BLOWER NO 1 BLW201	MOTOR AIR BLOWER NO 1 BLW201	6	4	PVC / SWA / PVC	4th core	5	15
BLW/M2/002/P/001	NEW BLOWER ROOM MCC	LOCAL ISOLATOR AIR BLOWER NO 2 BLW202	6	4	PVC / SWA / PVC	4th core	13	15
BLW/M2/002/P/002	LOCAL ISOLATOR AIR BLOWER NO 2 BLW202	MOTOR AIR BLOWER NO 2 BLW202	6	4	PVC / SWA / PVC	4th core	5	15
BLW/M2/003/P/001	NEW BLOWER ROOM MCC	LOCAL ISOLATOR AIR BLOWER NO 3 BLW203	6	4	PVC / SWA / PVC	4th core	15	15
BLW/M2/003/P/002	LOCAL ISOLATOR AIR BLOWER NO 3 BLW203	MOTOR AIR BLOWER NO 3 BLW203	6	4	PVC / SWA / PVC	4th core	5	15
BLW/M2/004/P/001	NEW BLOWER ROOM MCC	LOCAL ISOLATOR AIR BLOWER NO 4 BLW204	6	4	PVC / SWA / PVC	4th core	15	15
BLW/M2/004/P/002	LOCAL ISOLATOR AIR BLOWER NO 4 BLW204	MOTOR AIR BLOWER NO 4 BLW204	6	4	PVC / SWA / PVC	4th core	5	15
BLW/M2/005/P/001	NEW BLOWER ROOM MCC	LOCAL ISOLATOR AIR BLOWER NO 5 BLW205	6	4	PVC / SWA / PVC	4th core	18	15
BLW/M2/005/P/002	LOCAL ISOLATOR AIR BLOWER NO 5 BLW205	MOTOR AIR BLOWER NO 5 BLW205	6	4	PVC / SWA / PVC	4th core	5	15
BLW/M2/006/P/001	NEW BLOWER ROOM MCC	LOCAL ISOLATOR AIR BLOWER NO 6 BLW206	6	4	PVC / SWA / PVC	4th core	18	15
BLW/M2/006/P/002	LOCAL ISOLATOR AIR BLOWER NO 6 BLW206	MOTOR AIR BLOWER NO 6 BLW206	6	4	PVC / SWA / PVC	4th core	5	15

BUSHKOPPIE WWTW IRP: 400V POWER CABLE SCHEDULES

DRG NO: 18056-73-12-155 SHT 12 OF 26 **(M2 New Blower Room MCC)** REV: T00 MARCH 2024

CABLE NO	CABLE FED FROM	CABLE FEEDING TO	SIZE IN mm^2	NO OF CORES	TYPE	SEPARATE EARTH	EST LENGTH	LOAD Kw
BLW/M2/007/P/001	NEW BLOWER ROOM MCC	LOCAL ISOLATOR AIR BLOWER NO 7 BLW207	6	4	PVC / SWA / PVC	4th core	20	15
BLW/M2/007/P/002	LOCAL ISOLATOR AIR BLOWER NO 7 BLW207	MOTOR AIR BLOWER NO 7 BLW207	6	4	PVC / SWA / PVC	4th core	5	15
BLW/M2/008/P/001	NEW BLOWER ROOM MCC	LOCAL ISOLATOR AIR BLOWER NO 8 BLW208	6	4	PVC / SWA / PVC	4th core	20	15
BLW/M2/008/P/002	LOCAL ISOLATOR AIR BLOWER NO 8 BLW208	MOTOR AIR BLOWER NO 8 BLW208	6	4	PVC / SWA / PVC	4th core	5	15
BLW/M2/009/P/001	NEW BLOWER ROOM MCC	LOCAL ISOLATOR AIR COMPRESSOR NO 1 CMP201	6	4	PVC / SWA / PVC	4th core	10	15
BLW/M2/009/P/002	LOCAL ISOLATOR AIR COMPRESSOR NO 1 CMP201	MOTOR AIR COMPRESSOR NO 1 CMP201	6	4	PVC / SWA / PVC	4th core	5	15
BLW/M2/010/P/001	NEW BLOWER ROOM MCC	LOCAL ISOLATOR AIR COMPRESSOR NO 2 CMP202	6	4	PVC / SWA / PVC	4th core	10	15
BLW/M2/010/P/002	LOCAL ISOLATOR AIR COMPRESSOR NO 2 CMP202	MOTOR AIR COMPRESSOR NO 2 CMP202	6	4	PVC / SWA / PVC	4th core	5	15
BLW/M2/011/P/001	NEW BLOWER ROOM MCC	LOCAL ISOLATOR INLET WORKS TRASH SCREEN ITS001	4	4	PVC / SWA / PVC	4th core	195	2.2
BLW/M2/011/P/002	LOCAL ISOLATOR INLET WORKS TRASH SCREEN ITS001	MOTOR INLET WORKS TRASH SCREEN ITS001	4	4	PVC / SWA / PVC	4th core	5	2.2
BLW/M2/012/P/001	NEW BLOWER ROOM MCC	LOCAL ISOLATOR MCC ROOM FAN BBF201	2.5	4	PVC / SWA / PVC	4th core	7	1.1
BLW/M2/012/P/002	LOCAL ISOLATOR MCC ROOM FAN BBF201	FAN MOTOR MCC ROOM FAN BBF201	2.5	4	PVC / SWA / PVC	4th core	1	1.1

BUSHKOPPIE WWTW IRP: 400V POWER CABLE SCHEDULES

DRG NO: 18056-73-12-155 SHT 13 OF 26 **(M2 New Blower Room MCC)** REV: T00 MARCH 2024

CABLE NO	CABLE FED FROM	CABLE FEEDING TO	SIZE IN mm^2	NO OF CORES	TYPE	SEPARATE EARTH	EST LENGTH	LOAD Kw
BLW/M2/013/P/001	NEW BLOWER ROOM MCC	LOCAL ISOLATOR WW BOOSTER PUMP NO 1 MODULE 1 PMP101	10	4	PVC / SWA / PVC	4th core	45	22
BLW/M2/013/P/002	LOCAL ISOLATOR WW BOOSTER PUMP NO 1 MODULE 1 PMP101	MOTOR WW BOOSTER PUMP NO 1 MODULE 1 PMP101	10	4	PVC / SWA / PVC	4th core	5	22
BLW/M2/014/P/001	NEW BLOWER ROOM MCC	LOCAL ISOLATOR WW BOOSTER PUMP NO 2 MODULE 1 PMP102	10	4	PVC / SWA / PVC	4th core	45	22
BLW/M2/014/P/002	LOCAL ISOLATOR WW BOOSTER PUMP NO 2 MODULE 1 PMP102	MOTOR WW BOOSTER PUMP NO 2 MODULE 1 PMP102	10	4	PVC / SWA / PVC	4th core	5	22
BLW/M2/015/P/001	NEW BLOWER ROOM MCC	LOCAL ISOLATOR WW BOOSTER PUMP NO 1 MODULE 2 PMP201	10	4	PVC / SWA / PVC	4th core	45	22
BLW/M2/015/P/002	LOCAL ISOLATOR WW BOOSTER PUMP NO 1 MODULE 2 PMP201	MOTOR WW BOOSTER PUMP NO 1 MODULE 2 PMP201	10	4	PVC / SWA / PVC	4th core	5	22
BLW/M2/016/P/001	NEW BLOWER ROOM MCC	LOCAL ISOLATOR WW BOOSTER PUMP NO 2 MODULE 2 PMP202	10	4	PVC / SWA / PVC	4th core	45	22
BLW/M2/016/P/002	LOCAL ISOLATOR WW BOOSTER PUMP NO 2 MODULE 2 PMP202	MOTOR WW BOOSTER PUMP NO 2 MODULE 2 PMP202	10	4	PVC / SWA / PVC	4th core	5	22
BLW/M2/017/P/001	NEW BLOWER ROOM MCC	LOCAL ISOLATOR IW TRASH SCREEN CRAWL BEAM	4	4	PVC / SWA / PVC	4th core	195	
BLW/M2/017/P/002	LOCAL ISOLATOR IW TRASH SCREEN CRAWL BEAM	MOTOR IW TRASH SCREEN CRAWL BEAM	4	4	PVC / SWA / PVC	4th core	5	
BLW/M2/018/P/001	NEW BLOWER ROOM MCC	VALVE ACTUATOR NO 1	2.5	4	PVC / SWA / PVC	4th core	200	1.5
BLW/M2/019/P/001	NEW BLOWER ROOM MCC	VALVE ACTUATOR NO 2	2.5	4	PVC / SWA / PVC	4th core	110	1.5
BLW/M2/020/P/001	NEW BLOWER ROOM MCC	VALVE ACTUATOR NO 3	2.5	4	PVC / SWA / PVC	4th core	110	1.5

BUSHKOPPIE WWTW IRP: 400V POWER CABLE SCHEDULES

DRG NO: 18056-73-12-155 SHT 14 OF 26 **(Existing Wash Water PS MCC)** REV: T00 MARCH 2024

CABLE NO	CABLE FED FROM	CABLE FEEDING TO	SIZE IN mm^2	NO OF CORES	TYPE	SEPARATE EARTH	EST LENGTH	LOAD Kw
WWPS/001/P/001	WASH WATER PS MCC	LOCAL ISOLATOR WASH WATER TRANSFER PUMP NO 1	16	4	PVC / SWA / PVC	4th core	16	30
WWPS/001/P/002	LOCAL ISOLATOR WASH WATER TRANSFER PUMP NO 1	MOTOR WASH WATER TRANSFER PUMP NO 1	16	4	PVC / SWA / PVC	4th core	5	30
WWPS/002/P/001	WASH WATER PS MCC	LOCAL ISOLATOR WASH WATER TRANSFER PUMP NO 2	16	4	PVC / SWA / PVC	4th core	16	30
WWPS/002/P/002	LOCAL ISOLATOR WASH WATER TRANSFER PUMP NO 2	MOTOR WASH WATER TRANSFER PUMP NO 2	16	4	PVC / SWA / PVC	4th core	5	30
WWPS/003/P/001	WASH WATER PS MCC	LOCAL ISOLATOR WASH WATER TRANSFER PUMP NO 3	16	4	PVC / SWA / PVC	4th core	16	30
WWPS/003/P/002	LOCAL ISOLATOR WASH WATER TRANSFER PUMP NO 3	MOTOR WASH WATER TRANSFER PUMP NO 3	16	4	PVC / SWA / PVC	4th core	5	30
WWPS/004/P/001	WASH WATER PS MCC	LOCAL ISOLATOR FILTER FEED PUMP NO 1	6	4	PVC / SWA / PVC	4th core	15	15
WWPS/004/P/002	LOCAL ISOLATOR FILTER FEED PUMP NO 1	MOTOR FILTER FEED PUMP NO 1	6	4	PVC / SWA / PVC	4th core	5	15
WWPS/005/P/001	WASH WATER PS MCC	LOCAL ISOLATOR FILTER FEED PUMP NO 2	6	4	PVC / SWA / PVC	4th core	15	15
WWPS/005/P/002	LOCAL ISOLATOR FILTER FEED PUMP NO 2	MOTOR FILTER FEED PUMP NO 2	6	4	PVC / SWA / PVC	4th core	5	15
WWPS/006/P/001	WASH WATER PS MCC	LOCAL ISOLATOR BLOWER NO 1	6	4	PVC / SWA / PVC	4th core	17	11
WWPS/006/P/002	LOCAL ISOLATOR BLOWER NO 1	MOTOR BLOWER NO 1	6	4	PVC / SWA / PVC	4th core	5	11

BUSHKOPPIE WWTW IRP: 400V POWER CABLE SCHEDULES

DRG NO: 18056-73-12-155 SHT 15 OF 26 **(Existing Wash Water PS MCC)** REV: T00 MARCH 2024

CABLE NO	CABLE FED FROM	CABLE FEEDING TO	SIZE IN mm^2	NO OF CORES	TYPE	SEPARATE EARTH	EST LENGTH	LOAD Kw
WWPS/007/P/001	WASH WATER PS MCC	LOCAL ISOLATOR BLOWER NO 2	6	4	PVC / SWA / PVC	4th core	17	11
WWPS/007/P/002	LOCAL ISOLATOR BLOWER NO 2	MOTOR BLOWER NO 2	6	4	PVC / SWA / PVC	4th core	5	11
WWPS/008/P/001	WASH WATER PS MCC	LOCAL ISOLATOR PUMP STATION EXTRACTION FAN	2.5	4	PVC / SWA / PVC	4th core	8	1.5
WWPS/008/P/002	LOCAL ISOLATOR PUMP STATION EXTRACTION FAN	FAN MOTOR PUMP STATION EXTRACTION FAN	2.5	4	PVC / SWA / PVC	4th core	1	1.5
WWPS/009/P/001	WASH WATER PS MCC	LOCAL ISOLATOR MCC ROOM PRESSURISING FAN	2.5	4	PVC / SWA / PVC	4th core	8	1.1
WWPS/009/P/002	LOCAL ISOLATOR MCC ROOM PRESSURISING FAN	FAN MOTOR MCC ROOM PRESSURISING FAN	2.5	4	PVC / SWA / PVC	4th core	1	1.1
WWPS/010/P/001	WASH WATER PS MCC	LOCAL ISOLATOR SUMP PUMP	2.5	4	PVC / SWA / PVC	4th core	17	2.2
WWPS/010/P/002	LOCAL ISOLATOR SUMP PUMP	MOTOR SUMP PUMP	2.5	4	PVC / SWA / PVC	4th core	2	2.2
WWPS/011/P/001	WASH WATER PS MCC	VALVE ACTUATOR NO 1	2.5	4	PVC / SWA / PVC	4th core	90	1.5
WWPS/012/P/001	WASH WATER PS MCC	VALVE ACTUATOR NO 2	2.5	4	PVC / SWA / PVC	4th core	90	1.5
WWPS/013/P/001	WASH WATER PS MCC	VALVE ACTUATOR NO 3	2.5	4	PVC / SWA / PVC	4th core	90	1.5

BUSHKOPPIE WWTW IRP: 400V POWER CABLE SCHEDULES

DRG NO: 18056-73-12-155 SHT 16 OF 26 **(New Wash Water Filter MCC)** REV: T00 MARCH 2024

CABLE NO	CABLE FED FROM	CABLE FEEDING TO	SIZE IN mm^2	NO OF CORES	TYPE	SEPARATE EARTH	EST LENGTH	LOAD Kw
WWFS/001/P/001	WASH WATER FS MCC	LOCAL ISOLATOR FILTER FEED PUMP NO 1	6	4	PVC / SWA / PVC	4th core	15	15
WWFS/001/P/002	LOCAL ISOLATOR FILTER FEED PUMP NO 1	MOTOR FILTER FEED PUMP NO 1	6	4	PVC / SWA / PVC	4th core	5	15
WWFS/002/P/001	WASH WATER FS MCC	LOCAL ISOLATOR FILTER FEED PUMP NO 2	6	4	PVC / SWA / PVC	4th core	15	15
WWFS/002/P/002	LOCAL ISOLATOR FILTER FEED PUMP NO 2	MOTOR FILTER FEED PUMP NO 2	6	4	PVC / SWA / PVC	4th core	5	15
WWFS/003/P/001	WASH WATER FS MCC	LOCAL ISOLATOR AIR BLOWER NO 1	6	4	PVC / SWA / PVC	4th core	15	11
WWFS/003/P/002	LOCAL ISOLATOR AIR BLOWER NO 1	MOTOR AIR BLOWER NO 1	6	4	PVC / SWA / PVC	4th core	5	11
WWFS/004/P/001	WASH WATER FS MCC	LOCAL ISOLATOR AIR BLOWER NO 2	6	4	PVC / SWA / PVC	4th core	15	11
WWFS/004/P/002	LOCAL ISOLATOR AIR BLOWER NO 2	MOTOR AIR BLOWER NO 2	6	4	PVC / SWA / PVC	4th core	5	11
WWFS/005/P/001	WASH WATER FS MCC	LOCAL ISOLATOR MCC ROOM PRESSURISING FAN	2.5	4	PVC / SWA / PVC	4th core	8	1.1
WWFS/005/P/002	LOCAL ISOLATOR MCC ROOM PRESSURISING FAN	FAN MOTOR MCC ROOM PRESSURISING FAN	2.5	4	PVC / SWA / PVC	4th core	1	1.1
WWFS/006/P/001	WASH WATER FS MCC	LOCAL ISOLATOR SUMP PUMP	2.5	4	PVC / SWA / PVC	4th core	16	2.2
WWFS/006/P/002	LOCAL ISOLATOR SUMP PUMP	MOTOR SUMP PUMP	2.5	4	PVC / SWA / PVC	4th core	2	2.2

BUSHKOPPIE WWTW IRP: 400V POWER CABLE SCHEDULES

DRG NO: 18056-73-12-155 SHT 17 OF 26 **(New Wash Water Filter MCC)** REV: T00 MARCH 2024

CABLE NO	CABLE FED FROM	CABLE FEEDING TO	SIZE IN mm^2	NO OF CORES	TYPE	SEPARATE EARTH	EST LENGTH	LOAD Kw
WWFS/007/P/001	WASH WATER FS MCC	VALVE ACTUATOR NO 1	2.5	4	PVC / SWA / PVC	4th core	90	1.5
WWFS/008/P/001	WASH WATER FS MCC	VALVE ACTUATOR NO 2	2.5	4	PVC / SWA / PVC	4th core	90	1.5
WWFS/009/P/001	WASH WATER FS MCC	VALVE ACTUATOR NO 3	2.5	4	PVC / SWA / PVC	4th core	90	1.5

BUSHKOPPIE WWTW IRP: 230V CONTROL CABLE SCHEDULES

DRG NO: 18056-73-12-155 SHT 18 OF 26 **(HOW Module 1 MCC)** REV: T00 MARCH 2024

CABLE NO	CABLE FED FROM	CABLE FEEDING TO	SIZE IN mm^2	NO OF CORES	TYPE	SEPARATE EARTH	EST LENGTH	LOAD Kw
HOW/M1/003/C/001	HOW MODULE 1 MCC (FWD / REV)	LOCAL ISOLATOR COARSE SCREEN NO 1 CSN101	1.5	7	PVC / SWA / PVC		150	
HOW/M1/004/C/001	HOW MODULE 1 MCC (FWD / REV)	LOCAL ISOLATOR COARSE SCREEN NO 2 CSN102	1.5	7	PVC / SWA / PVC		150	
HOW/M1/005/C/001	HOW MODULE 1 MCC	LOCAL ISOLATOR COARSE SCREEN WASHER NO 1 CWM101	1.5	7	PVC / SWA / PVC		150	
HOW/M1/006/C/001	HOW MODULE 1 MCC	LOCAL ISOLATOR COARSE SCREEN WASHER NO 2 CWM102	1.5	7	PVC / SWA / PVC		150	
HOW/M1/007/C/001	HOW MODULE 1 MCC (FWD / REV)	LOCAL ISOLATOR COARSE SCREEN COMPACTOR NO 1 CCM101	1.5	7	PVC / SWA / PVC		150	
HOW/M1/008/C/001	HOW MODULE 1 MCC (FWD / REV)	LOCAL ISOLATOR COARSE SCREEN COMPACTOR NO 2 CCM102	1.5	7	PVC / SWA / PVC		150	
HOW/M1/009/C/001	HOW MODULE 1 MCC	LOCAL ISOLATOR GRIT CLASSIFIER NO 1 GCM101	1.5	7	PVC / SWA / PVC		100	
HOW/M1/010/C/001	HOW MODULE 1 MCC	LOCAL ISOLATOR GRIT CLASSIFIER WASHER NO 1 GCW101	1.5	7	PVC / SWA / PVC		100	
HOW/M1/011/C/001	HOW MODULE 1 MCC	LOCAL ISOLATOR GRIT CLASSIFIER NO 2 GCM102	1.5	7	PVC / SWA / PVC		100	
HOW/M1/012/C/001	HOW MODULE 1 MCC	LOCAL ISOLATOR GRIT CLASSIFIER WASHER NO 2 GCW102	1.5	7	PVC / SWA / PVC		100	
HOW/M1/013/C/001	HOW MODULE 1 MCC	LOCAL ISOLATOR AIR BLOWER NO 1	1.5	7	PVC / SWA / PVC		72	
HOW/M1/014/C/001	HOW MODULE 1 MCC	LOCAL ISOLATOR AIR BLOWER NO 2	1.5	7	PVC / SWA / PVC		72	

BUSHKOPPIE WWTW IRP: 230V CONTROL CABLE SCHEDULES

DRG NO: 18056-73-12-155 SHT 19 OF 26 **(HOW Module 1 MCC)** REV: T00 MARCH 2024

CABLE NO	CABLE FED FROM	CABLE FEEDING TO	SIZE IN mm^2	NO OF CORES	TYPE	SEPARATE EARTH	EST LENGTH	LOAD Kw
HOW/M1/015/C/001	HOW MODULE 1 MCC	LOCAL ISOLATOR AIR BLOWER NO 3	1.5	7	PVC / SWA / PVC		72	
HOW/M1/016/C/001	HOW MODULE 1 MCC	LOCAL ISOLATOR AIR BLOWER NO 4	1.5	7	PVC / SWA / PVC		72	
HOW/M1/017/C/001	HOW MODULE 1 MCC	LOCAL ISOLATOR AIR BLOWER NO 5	1.5	7	PVC / SWA / PVC		72	
HOW/M1/018/C/001	HOW MODULE 1 MCC	LOCAL ISOLATOR AIR BLOWER NO 6	1.5	7	PVC / SWA / PVC		72	
HOW/M1/019/C/001	HOW MODULE 1 MCC	LOCAL ISOLATOR AIR BLOWER NO 7	1.5	7	PVC / SWA / PVC		72	
HOW/M1/020/C/001	HOW MODULE 1 MCC	LOCAL ISOLATOR AIR BLOWER NO 8	1.5	7	PVC / SWA / PVC		72	
HOW/M1/021/C/001	HOW MODULE 1 MCC (FWD / REV)	LOCAL ISOLATOR FINE SCREEN NO 1 FSN101	1.5	7	PVC / SWA / PVC		120	
HOW/M1/022/C/001	HOW MODULE 1 MCC (FWD / REV)	LOCAL ISOLATOR FINE SCREEN NO 2 FSN102	1.5	7	PVC / SWA / PVC		120	
HOW/M1/023/C/001	HOW MODULE 1 MCC (FWD / REV)	LOCAL ISOLATOR FINE SCREEN NO 3 FSN103	1.5	7	PVC / SWA / PVC		120	
HOW/M1/024/C/001	HOW MODULE 1 MCC (FWD / REV)	LOCAL ISOLATOR FINE SCREEN NO 4 FSN104	1.5	7	PVC / SWA / PVC		120	
HOW/M1/025/C/001	HOW MODULE 1 MCC	LOCAL ISOLATOR FINE SCREEN WASHER NO 1 FSW101	1.5	7	PVC / SWA / PVC		120	
HOW/M1/026/C/001	HOW MODULE 1 MCC	LOCAL ISOLATOR FINE SCREEN WASHER NO 2 FSW102	1.5	7	PVC / SWA / PVC		120	

BUSHKOPPIE WWTW IRP: 230V CONTROL CABLE SCHEDULES

DRG NO: 18056-73-12-155 SHT 20 OF 26 **(HOW Module 1 MCC)** REV: T00 MARCH 2024

CABLE NO	CABLE FED FROM	CABLE FEEDING TO	SIZE IN mm^2	NO OF CORES	TYPE	SEPARATE EARTH	EST LENGTH	LOAD Kw
HOW/M1/027/C/001	HOW MODULE 1 MCC (FWD / REV)	LOCAL ISOLATOR FINE SCREEN COMPACTOR NO 1 FSC101	1.5	7	PVC / SWA / PVC		120	
HOW/M1/028/C/001	HOW MODULE 1 MCC (FWD / REV)	LOCAL ISOLATOR FINE SCREEN COMPACTOR NO 2 FSC102	1.5	7	PVC / SWA / PVC		120	
HOW/M1/029/C/001	HOW MODULE 1 MCC	LOCAL ISOLATOR FINE SCREEN CONVEYOR FSY101	1.5	7	PVC / SWA / PVC		120	
HOW/M1/030/C/001	HOW MODULE 1 MCC	LOCAL ISOLATOR MACERATOR NO 1 MPM001	1.5	7	PVC / SWA / PVC		120	
HOW/M1/031/C/001	HOW MODULE 1 MCC	LOCAL ISOLATOR MACERATOR NO 2 MPM002	1.5	7	PVC / SWA / PVC		120	
HOW/M1/032/C/001	HOW MODULE 1 MCC	LOCAL ISOLATOR MACERATOR SUMP PUMP MSP001	1.5	7	PVC / SWA / PVC		120	

BUSHKOPPIE WWTW IRP: 230V CONTROL CABLE SCHEDULES

DRG NO: 18056-73-12-155 SHT 21 OF 26 **(HOW Module 2 MCC)** REV: T00 MARCH 2024

CABLE NO	CABLE FED FROM	CABLE FEEDING TO	SIZE IN mm^2	NO OF CORES	TYPE	SEPARATE EARTH	EST LENGTH	LOAD Kw
HOW/M2/006/C/001	HOW MODULE 2 MCC	LOCAL ISOLATOR GRIT CLASSIFIER NO 1 GCM201	1.5	7	PVC / SWA / PVC		100	
HOW/M2/007/C/001	HOW MODULE 2 MCC	LOCAL ISOLATOR GRIT CLASSIFIER WASHER NO 1 GCW201	1.5	7	PVC / SWA / PVC		100	
HOW/M2/008/C/001	HOW MODULE 2 MCC	LOCAL ISOLATOR GRIT CLASSIFIER NO 2 GCM202	1.5	7	PVC / SWA / PVC		100	
HOW/M2/009/C/001	HOW MODULE 2 MCC	LOCAL ISOLATOR GRIT CLASSIFIER WASHER NO 2 GCW202	1.5	7	PVC / SWA / PVC		100	
HOW/M2/010/C/001	HOW MODULE 2 MCC	LOCAL ISOLATOR GRIT CONVEYOR GCY201	1.5	7	PVC / SWA / PVC		100	
HOW/M2/011/C/001	HOW MODULE 2 MCC	LOCAL ISOLATOR GRIT BIN SELECTOR GBS201	1.5	7	PVC / SWA / PVC		100	
HOW/M2/012/C/001	HOW MODULE 2 MCC	LOCAL ISOLATOR GRIT BIN TROLLEY NO 1 GBD201	1.5	7	PVC / SWA / PVC		100	
HOW/M2/013/C/001	HOW MODULE 2 MCC	LOCAL ISOLATOR GRIT BIN TROLLEY NO 2 GBD202	1.5	7	PVC / SWA / PVC		100	
HOW/M2/014/C/001	HOW MODULE 2 MCC	LOCAL ISOLATOR GRIT BIN TROLLEY NO 3 GBD203	1.5	7	PVC / SWA / PVC		100	

BUSHKOPPIE WWTW IRP: 230V CONTROL CABLE SCHEDULES

DRG NO: 18056-73-12-155 SHT 22 OF 26 **(HOW Module 1 Compressor MCC)** REV: T00 MARCH 2024

CABLE NO	CABLE FED FROM	CABLE FEEDING TO	SIZE IN mm^2	NO OF CORES	TYPE	SEPARATE EARTH	EST LENGTH	LOAD Kw
CMP/M1/001/C/001	COMPRESSOR M1 MCC	LOCAL ISOLATOR COMPRESSOR NO 1 CMP101	1.5	7	PVC / SWA / PVC		10	
CMP/M1/002/C/001	COMPRESSOR M1 MCC	LOCAL ISOLATOR COMPRESSOR NO 2 CMP102	1.5	7	PVC / SWA / PVC		10	

BUSHKOPPIE WWTW IRP: 230V CONTROL CABLE SCHEDULES

DRG NO: 18056-73-12-155 SHT 23 OF 26 **(M2 New Blower Room MCC)** REV: T00 MARCH 2024

CABLE NO	CABLE FED FROM	CABLE FEEDING TO	SIZE IN mm^2	NO OF CORES	TYPE	SEPARATE EARTH	EST LENGTH	LOAD Kw
BLW/M2/001/C/001	NEW BLOWER ROOM MCC	LOCAL ISOLATOR AIR BLOWER NO 1 BLW201	1.5	7	PVC / SWA / PVC		13	
BLW/M2/002/C/001	NEW BLOWER ROOM MCC	LOCAL ISOLATOR AIR BLOWER NO 2 BLW202	1.5	7	PVC / SWA / PVC		13	
BLW/M2/003/C/001	NEW BLOWER ROOM MCC	LOCAL ISOLATOR AIR BLOWER NO 3 BLW203	1.5	7	PVC / SWA / PVC		15	
BLW/M2/004/C/001	NEW BLOWER ROOM MCC	LOCAL ISOLATOR AIR BLOWER NO 4 BLW204	1.5	7	PVC / SWA / PVC		15	
BLW/M2/005/C/001	NEW BLOWER ROOM MCC	LOCAL ISOLATOR AIR BLOWER NO 5 BLW205	1.5	7	PVC / SWA / PVC		18	
BLW/M2/006/C/001	NEW BLOWER ROOM MCC	LOCAL ISOLATOR AIR BLOWER NO 6 BLW206	1.5	7	PVC / SWA / PVC		18	
BLW/M2/007/C/001	NEW BLOWER ROOM MCC	LOCAL ISOLATOR AIR BLOWER NO 7 BLW207	1.5	7	PVC / SWA / PVC		20	
BLW/M2/008/C/001	NEW BLOWER ROOM MCC	LOCAL ISOLATOR AIR BLOWER NO 8 BLW208	1.5	7	PVC / SWA / PVC		20	
BLW/M2/009/C/001	NEW BLOWER ROOM MCC	LOCAL ISOLATOR AIR COMPRESSOR NO 1 CMP201	1.5	7	PVC / SWA / PVC		10	
BLW/M2/010/C/001	NEW BLOWER ROOM MCC	LOCAL ISOLATOR AIR COMPRESSOR NO 2 CMP202	1.5	7	PVC / SWA / PVC		10	
BLW/M2/011/C/001	NEW BLOWER ROOM MCC	LOCAL ISOLATOR INLET WORKS TRASH SCREEN ITS001	1.5	7	PVC / SWA / PVC		195	
BLW/M2/012/C/001	NEW BLOWER ROOM MCC	LOCAL ISOLATOR MCC ROOM FAN BBF201	1.5	7	PVC / SWA / PVC		7	

BUSHKOPPIE WWTW IRP: 230V CONTROL CABLE SCHEDULES

DRG NO: 18056-73-12-155 SHT 24 OF 26 **(M2 New Blower Room MCC)** REV: T00 MARCH 2024

CABLE NO	CABLE FED FROM	CABLE FEEDING TO	SIZE IN mm^2	NO OF CORES	TYPE	SEPARATE EARTH	EST LENGTH	LOAD Kw
BLW/M2/013/C/001	NEW BLOWER ROOM MCC	LOCAL ISOLATOR WW BOOSTER PUMP NO 1 MODULE 1 PMP101	1.5	7	PVC / SWA / PVC		45	
BLW/M2/014/C/001	NEW BLOWER ROOM MCC	LOCAL ISOLATOR WW BOOSTER PUMP NO 2 MODULE 1 PMP102	1.5	7	PVC / SWA / PVC		45	
BLW/M2/015/C/001	NEW BLOWER ROOM MCC	LOCAL ISOLATOR WW BOOSTER PUMP NO 1 MODULE 2 PMP201	1.5	7	PVC / SWA / PVC		45	
BLW/M2/016/C/001	NEW BLOWER ROOM MCC	LOCAL ISOLATOR WW BOOSTER PUMP NO 2 MODULE 2 PMP202	1.5	7	PVC / SWA / PVC		45	
BLW/M2/017/C/001	NEW BLOWER ROOM MCC	LOCAL ISOLATOR IW TRASH SCREEN CRAWL BEAM	1.5	7	PVC / SWA / PVC		195	

BUSHKOPPIE WWTW IRP: 230V CONTROL CABLE SCHEDULES

DRG NO: 18056-73-12-155 SHT 25 OF 26 **(Existing Wash Water PS MCC)** REV: T00 MARCH 2024

CABLE NO	CABLE FED FROM	CABLE FEEDING TO	SIZE IN mm^2	NO OF CORES	TYPE	SEPARATE EARTH	EST LENGTH	LOAD Kw
WWPS/001/C/001	WASH WATER PS MCC	LOCAL ISOLATOR WASH WATER TRANSFER PUMP NO 1	1.5	7	PVC / SWA / PVC		16	
WWPS/002/C/001	WASH WATER PS MCC	LOCAL ISOLATOR WASH WATER TRANSFER PUMP NO 2	1.5	7	PVC / SWA / PVC		16	
WWPS/003/C/001	WASH WATER PS MCC	LOCAL ISOLATOR WASH WATER TRANSFER PUMP NO 3	1.5	7	PVC / SWA / PVC		16	
WWPS/004/C/001	WASH WATER PS MCC	LOCAL ISOLATOR FILTER FEED PUMP NO 1	1.5	7	PVC / SWA / PVC		15	
WWPS/005/C/001	WASH WATER PS MCC	LOCAL ISOLATOR FILTER FEED PUMP NO 2	1.5	7	PVC / SWA / PVC		15	
WWPS/006/C/001	WASH WATER PS MCC	LOCAL ISOLATOR BLOWER NO 1	1.5	7	PVC / SWA / PVC		17	
WWPS/007/C/001	WASH WATER PS MCC	LOCAL ISOLATOR BLOWER NO 2	1.5	7	PVC / SWA / PVC		17	
WWPS/008/C/001	WASH WATER PS MCC	LOCAL ISOLATOR PUMP STATION EXTRACTION FAN	1.5	7	PVC / SWA / PVC		8	
WWPS/009/C/001	WASH WATER PS MCC	LOCAL ISOLATOR MCC ROOM PRESSURISING FAN	1.5	7	PVC / SWA / PVC		8	
WWPS/010/C/001	WASH WATER PS MCC	LOCAL ISOLATOR SUMP PUMP	1.5	7	PVC / SWA / PVC		17	

BUSHKOPPIE WWTW IRP: 230V CONTROL CABLE SCHEDULES

DRG NO: 18056-73-12-155 SHT 26 OF 26 **(New Wash Water Filter MCC)** REV: T00 MARCH 2024

CABLE NO	CABLE FED FROM	CABLE FEEDING TO	SIZE IN mm^2	NO OF CORES	TYPE	SEPARATE EARTH	EST LENGTH	LOAD Kw
WWFS/001/C/001	WASH WATER FS MCC	LOCAL ISOLATOR FILTER FEED PUMP NO 1	1.5	7	PVC / SWA / PVC		15	
WWFS/002/C/001	WASH WATER FS MCC	LOCAL ISOLATOR FILTER FEED PUMP NO 2	1.5	7	PVC / SWA / PVC		15	
WWFS/003/C/001	WASH WATER FS MCC	LOCAL ISOLATOR AIR BLOWER NO 1	1.5	7	PVC / SWA / PVC		15	
WWFS/004/C/001	WASH WATER FS MCC	LOCAL ISOLATOR AIR BLOWER NO 2	1.5	7	PVC / SWA / PVC		15	
WWFS/005/C/001	WASH WATER FS MCC	LOCAL ISOLATOR MCC ROOM PRESSURISING FAN	1.5	7	PVC / SWA / PVC		8	
WWFS/006/C/001	WASH WATER FS MCC	LOCAL ISOLATOR SUMP PUMP	1.5	7	PVC / SWA / PVC		16	

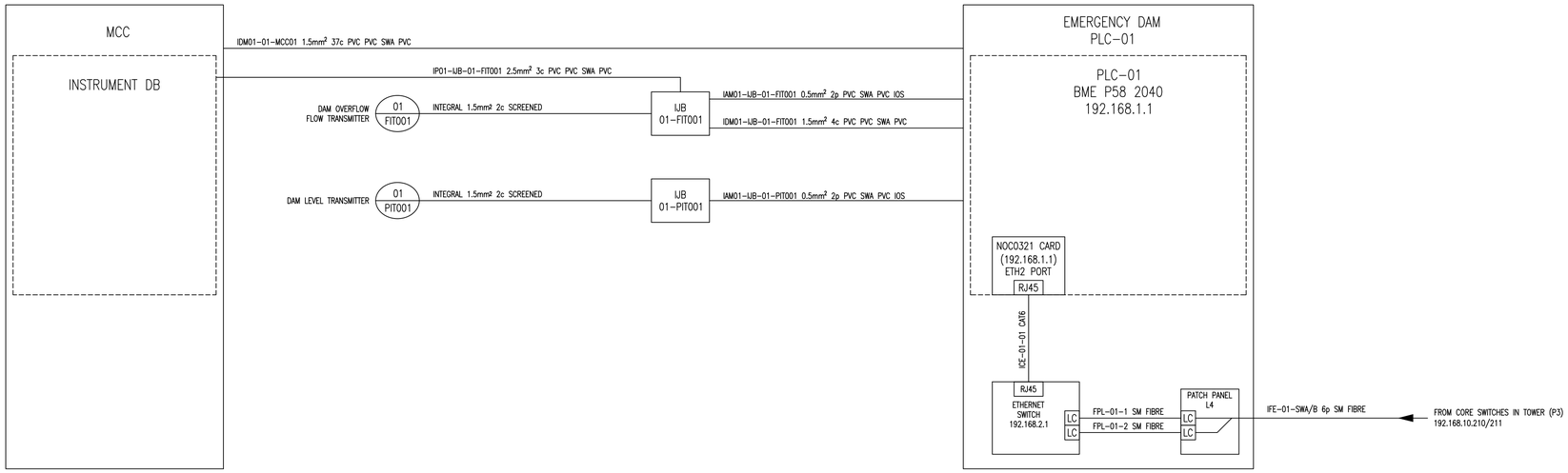

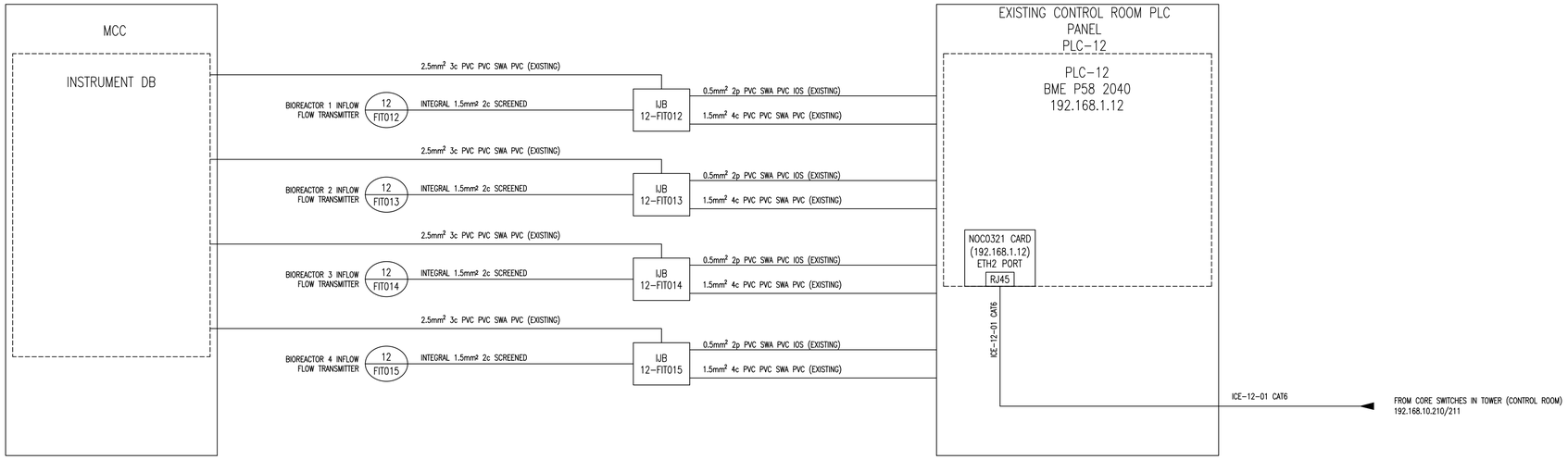

DEPARTMENT	APPROVED	DESIGNATION	DATE

CONSULTING ENGINEERS

ZITHOLELE CONSULTING
ZITHOLELE
P.O. BOX 6002
HALFWAY HOUSE, 1685
TEL: (011) 207 2060
FAX: (086) 674 6121
EMAIL: mail@zitholele.co.za

WSP Group Africa (Pty) Ltd
Building Services
Building C, Knightsbridge,
33 Sloane Street, Bryanston, 2191
Tel: +27 11 361 1300 Fax: +27 11 361 1431 www.wsp.com

SURVEYED	
DESIGNED	W BRITZ
DRAWN	M DYKE
CHECKED	
SERVICES CHECKED	
GEOTECHNICAL INVESTIGATION	
SERVITUDES	
APPROVED	
Pr. Eng. No.	
DATE	

JOHANNESBURG WATER (SOC) LTD

Johannesburg Water

17 HARRISON STREET
MARSHALLTOWN
2107

TEL: (011) 688-1400
FAX: (011) 688-1529

CITY OF JOHANNESBURG

BUSHKOPPIE WASTEWATER TREATMENT WORKS
INFRASTRUCTURE RENEWAL PLAN
EMERGENCY DAM PLC-01
CONTROL ROOM PLC-12
CABLE BLOCK DIAGRAM

DESIGN MANAGER

DATE

SCALE

NTS

AMENDMENTS		APPROVED	DATE
T0	FOR TENDER	W BRITZ	16.08.21
T1	RE-ISSUED FOR TENDER	CdT	07.01.25

DRAWING No.

JW NUMBER

CONSULTANT'S NUMBER
CI-01-CBD001

FILE No

TO T1

Z:\461000xx\46100563 - Bushkoppie WWTW HOW\51 CI\02-CADD\01-Current\03-Drawings\Cable Block Diagrams\46100563-WSP-DR-CI-01-CBD001_T1.dwg Jan 07, 2025 - 3:00pm

46100563-WSP-DR-CI-01-CBD001_T1.dwg

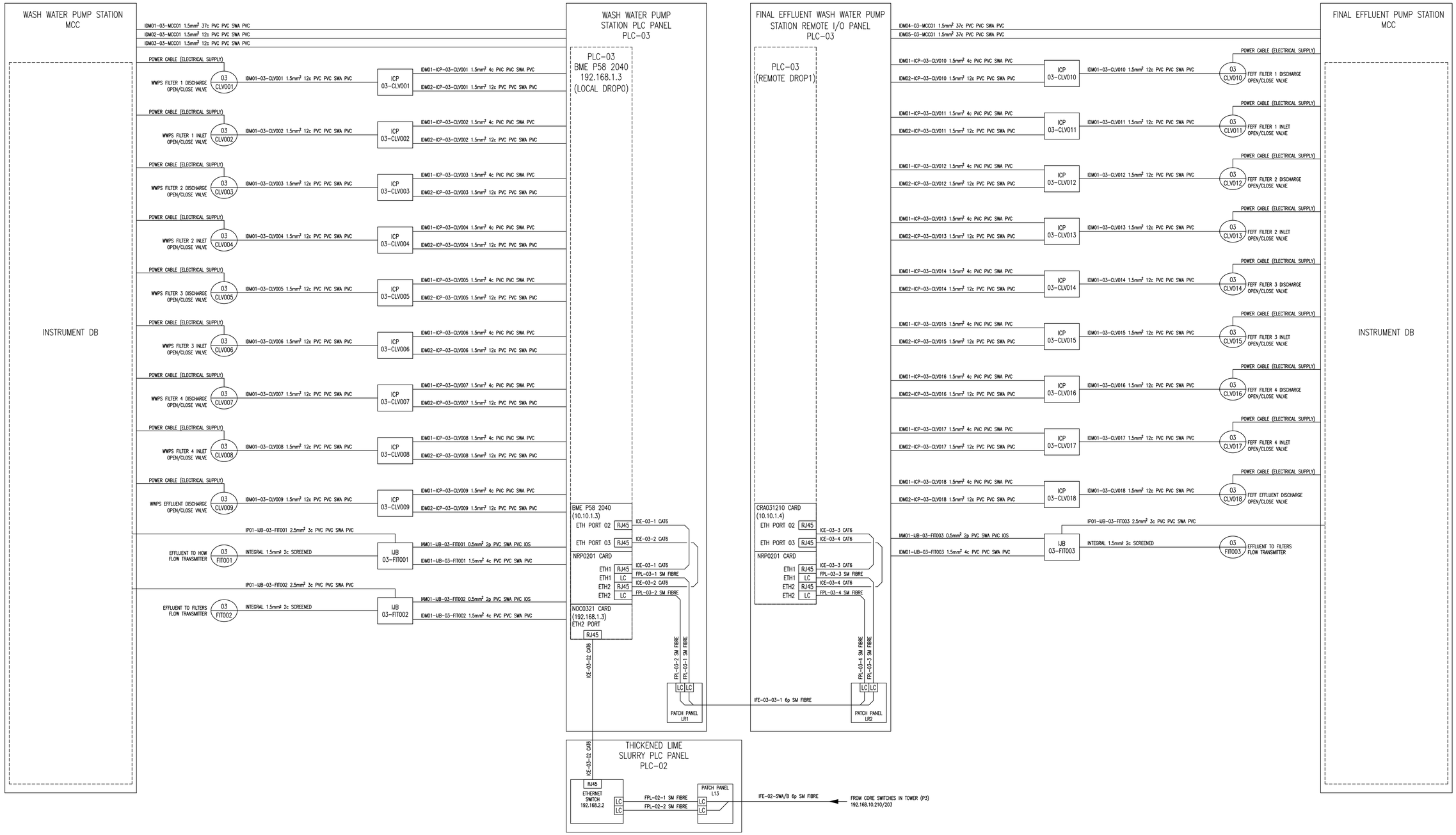

DEPARTMENT	APPROVED	DESIGNATION	DATE

CONSULTING ENGINEERS

ZITHOLELE CONSULTING
ZITHOLELE
P.O. BOX 6002
HALFWAY HOUSE, 1685
TEL: (011) 207 2060
FAX: (086) 674 6121
EMAIL: mail@zitholele.co.za

WSP Group Africa (Pty) Ltd
Building Services
Building C, Knightsbridge,
33 Sloane Street, Bryanston, 2191
Tel: +27 03 361 1300 Fax: +27 03 361 1431 www.wsp.com

SURVEYED	
DESIGNED	W BRITZ
DRAWN	M DYKE
CHECKED	
SERVICES CHECKED	
GEOTECHNICAL INVESTIGATION	
SERVITUDES	
APPROVED	
Pr. Eng. No.	
DATE	

JOHANNESBURG WATER (SOC) LTD

Johannesburg Water

17 HARRISON STREET
MARSHALLTOWN
2107

TEL: (011) 688-1400
FAX: (011) 688-1529

CITY OF JOHANNESBURG

BUSHKOPPIE WASTEWATER TREATMENT WORKS
INFRASTRUCTURE RENEWAL PLAN
WASH WATER PUMP STATION
PLC-03
CABLE BLOCK DIAGRAM

DESIGN MANAGER

DATE

SCALE
NTS

AMENDMENTS

		APPROVED	DATE
T0	FOR TENDER	W BRITZ	16.08.21
T1	RE-ISSUED FOR TENDER	CdT	07.01.25

DRAWING No.

JW NUMBER

CONSULTANT'S NUMBER
CI-03-CBD001

FILE No

T0 T1

Z:\461000xx\46100563 - Bushkoppie WWTW HOW\51 CI\02-CADD\01-Current\03-Drawings\Cable Block Diagrams\46100563-WSP-DR-CI-03-CBD001_T1.dwg Jan 07, 2025 - 2:58pm

46100563-WSP-DR-CI-03-CBD001_T1.dwg

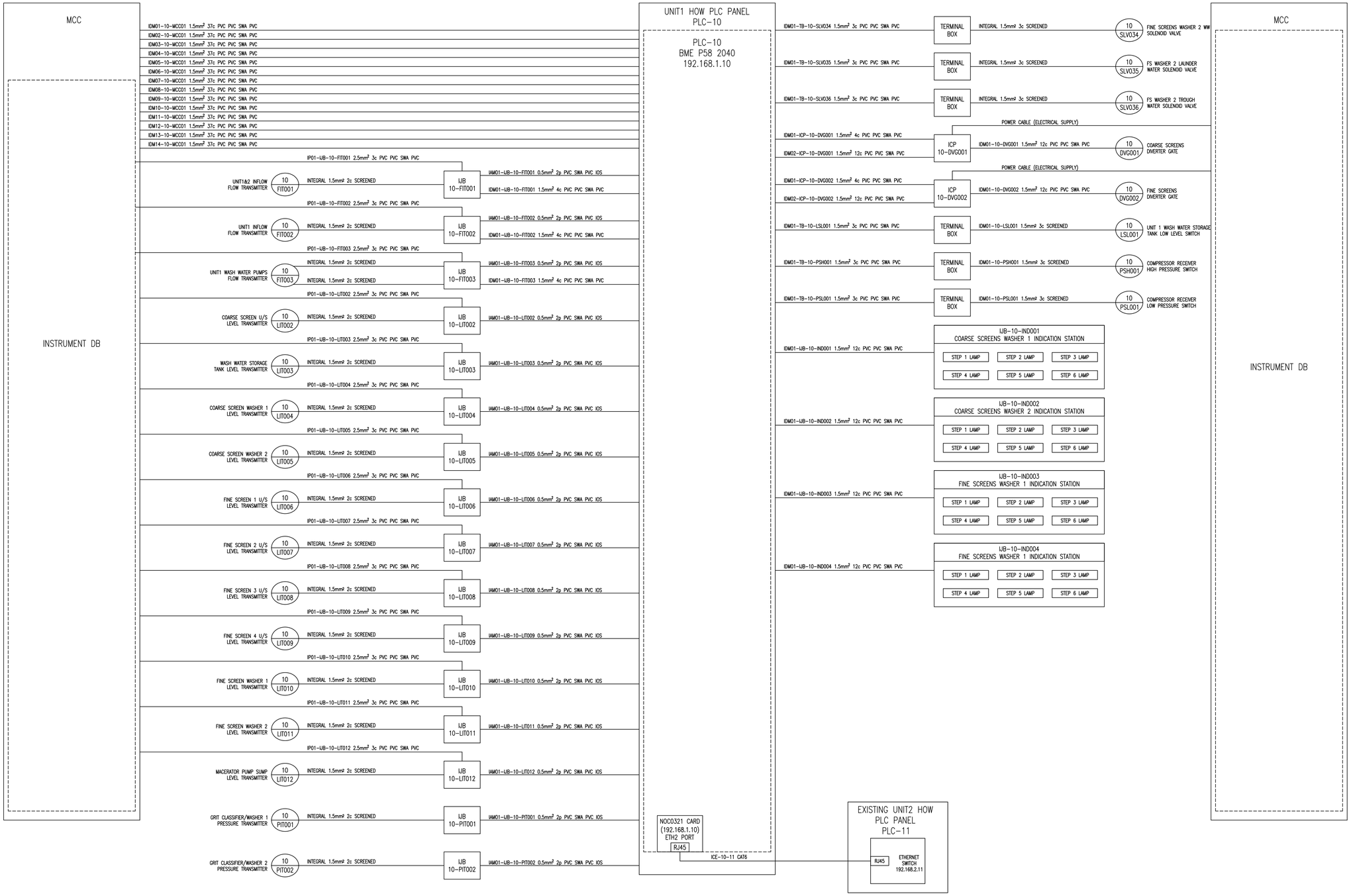

DEPARTMENT	APPROVED	DESIGNATION	DATE

CONSULTING ENGINEERS

ZITHOLELE CONSULTING

ZITHOLELE
P.O. BOX 6002
HALFWAY HOUSE, 1685
TEL: (011) 207 2060
FAX: (086) 674 6121
EMAIL: mail@zitholele.co.za

WSP Group Africa (Pty) Ltd
Building Services
Building C, Knightsbridge,
33 Sloane Street, Bryanston, 2191
Tel: +27 11 361 1300 Fax: +27 11 361 1431 www.wsp.com

SURVEYED	
DESIGNED	W BRITZ
DRAWN	M DYKE
CHECKED	
SERVICES CHECKED	
GEOTECHNICAL INVESTIGATION	
SERVITUDES	
APPROVED	
Pr. Eng. No.	
DATE	

JOHANNESBURG WATER (SOC) LTD

Johannesburg Water

17 HARRISON STREET
MARSHALLTOWN
2107

TEL: (011) 688-1400
FAX: (011) 688-1529

CITY OF JOHANNESBURG

BUSHKOPPIE WASTEWATER TREATMENT WORKS
INFRASTRUCTURE RENEWAL PLAN
UNIT 1 HOW
PLC-10
CABLE BLOCK DIAGRAM 1

DESIGN MANAGER

DATE

SCALE: NTS

AMENDMENTS		APPROVED	DATE
T0	FOR TENDER	W BRITZ	16.08.21
T1	RE-ISSUED FOR TENDER	CdT	07.01.25

DRAWING No.

JW NUMBER

CONSULTANT'S NUMBER
CI-10-CBD001

FILE No

TO T1

Z:\461000xx\46100563 - Bushkoppie WWTW HOW\51 CI\02-CADD\01-Current\03-Drawings\Cable Block Diagrams\46100563-WSP-DR-CI-10-CBD001_T1.dwg Jan 07, 2025 - 2:57pm

46100563-WSP-DR-CI-10-CBD001_T1.dwg

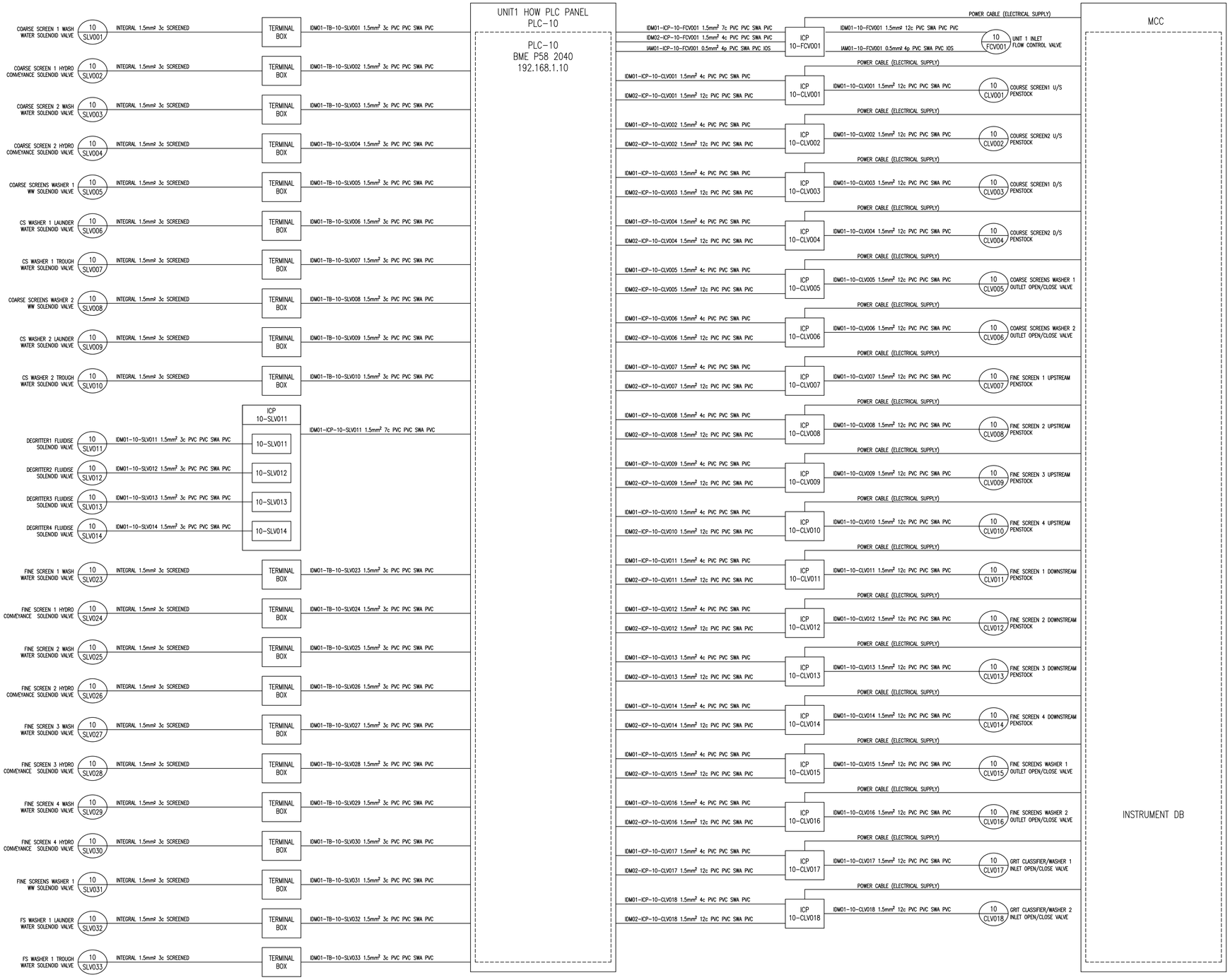

DEPARTMENT	APPROVED	DESIGNATION	DATE

CONSULTING ENGINEERS

ZITHOLELE CONSULTING

ZITHOLELE
P.O. BOX 6002
HALFWAY HOUSE, 1685
TEL: (011) 207 2060
FAX: (086) 674 6121
EMAIL: mail@zitholele.co.za

WSP Group Africa (Pty) Ltd
Building Services
Building C, Knightsbridge,
33 Sloane Street, Bryanston, 2191
Tel: +27 11 361 1300 Fax: +27 11 361 1431 www.wsp.com

SURVEYED	
DESIGNED	W BRITZ
DRAWN	M DYKE
CHECKED	
SERVICES CHECKED	
GEOTECHNICAL INVESTIGATION	
SERVITUDES	
APPROVED	
Pr. Eng. No.	
DATE	

JOHANNESBURG WATER (SOC) LTD

Johannesburg Water

17 HARRISON STREET
MARSHALLTOWN
2107

TEL: (011) 688-1400
FAX: (011) 688-1529

CITY OF JOHANNESBURG

BUSHKOPPIE WASTEWATER TREATMENT WORKS
INFRASTRUCTURE RENEWAL PLAN
UNIT 1 HOW
PLC–10
CABLE BLOCK DIAGRAM 2

DESIGN MANAGER

DATE

SCALE

NTS

AMENDMENTS

		APPROVED	DATE
T0	FOR TENDER	W BRITZ	16.08.21
T1	RE–ISSUED FOR TENDER	CdT	07.01.25

DRAWING No.

JW NUMBER

CONSULTANT'S NUMBER
CI–10–CBD002

FILE No

T0 T1

Z:\461000xx\46100563 – Bushkoppie WWTW HOW\51 CI\02-CADD\01-Current\03-Drawings\Cable Block Diagrams\46100563-WSP-DR-CI-10-CBD002_T1.dwg Jan 07, 2025 – 2:55pm

46100563–WSP–DR–CI–01–CBD001

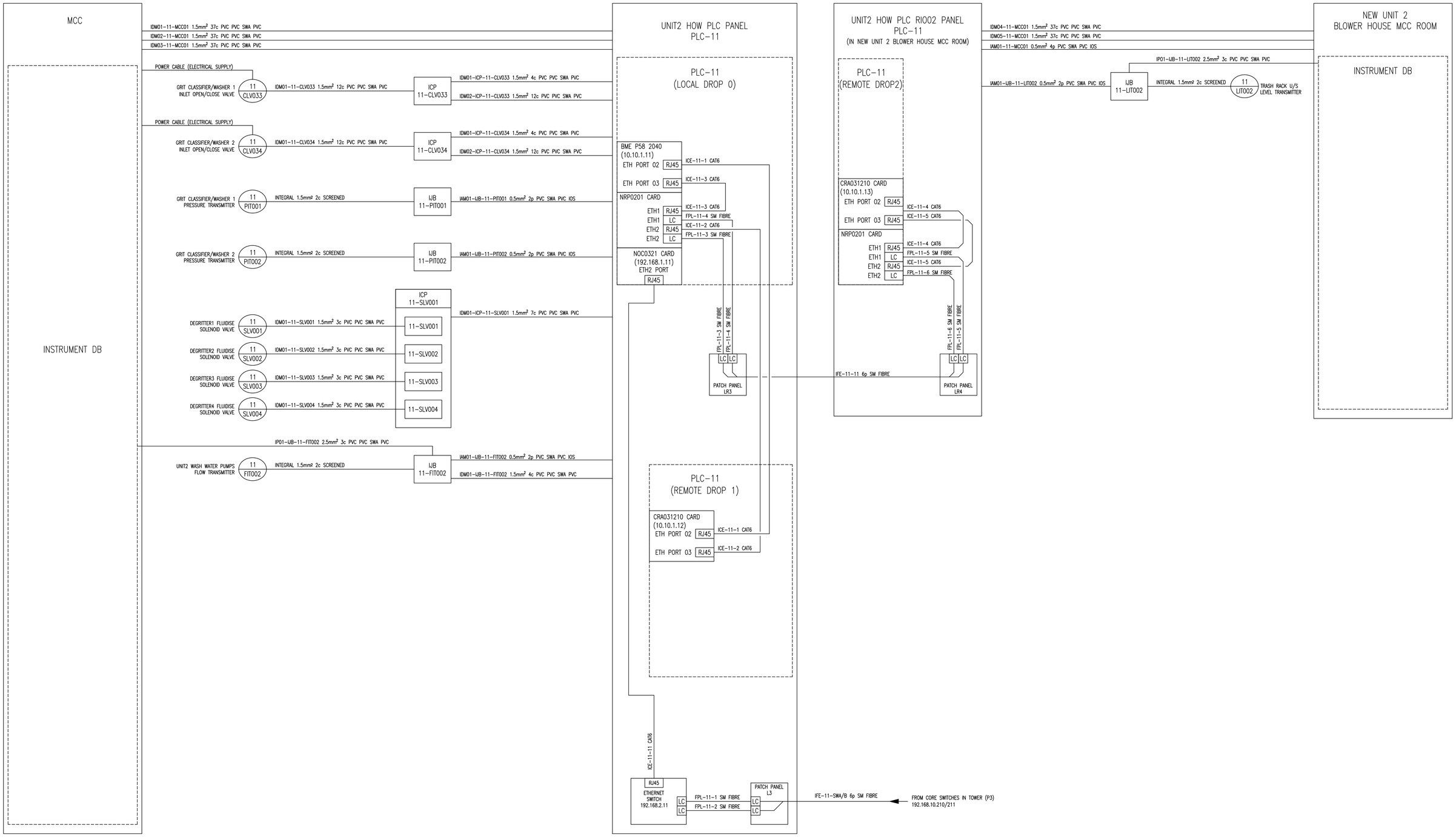

DEPARTMENT	APPROVED	DESIGNATION	DATE

CONSULTING ENGINEERS

ZITHOLELE CONSULTING
ZITHOLELE
P.O. BOX 6002
HALFWAY HOUSE, 1685
TEL: (011) 207 2060
FAX: (086) 674 6121
EMAIL: mail@zitholele.co.za

WSP Group Africa (Pty) Ltd
Building Services
Building C, Knightsbridge,
33 Sloane Street, Bryanston, 2191
Tel: +27 11 361 1300 Fax: +27 11 361 1431 www.wsp.com

SURVEYED	
DESIGNED	W BRITZ
DRAWN	M DYKE
CHECKED	
SERVICES CHECKED	
GEOTECHNICAL INVESTIGATION	
SERVITUDES	
APPROVED	
Pr. Eng. No.	
DATE	

JOHANNESBURG WATER (SOC) LTD

Johannesburg Water

17 HARRISON STREET
MARSHALLTOWN
2107

TEL: (011) 688-1400
FAX: (011) 688-1529

CITY OF JOHANNESBURG

BUSHKOPPIE WASTEWATER TREATMENT WORKS
INFRASTRUCTURE RENEWAL PLAN
UNIT 2 HOW
PLC–11
CABLE BLOCK DIAGRAM

DESIGN MANAGER

DATE

SCALE

NTS

AMENDMENTS		APPROVED	DATE
T0	FOR TENDER	W BRITZ	16.08.21
T1	RE–ISSUED FOR TENDER	CdT	07.01.25

DRAWING No.

JW NUMBER

CONSULTANT'S NUMBER
CI–11–CBD001

FILE No

T0 T1

Z:\461000xx\46100563 – Bushkoppie WWTW HOW\51 CI\02-CADD\01-Current\03-Drawings\Cable Block Diagrams\46100563-WSP-DR-CI-11-CBD001_T1.dwg Jan 07, 2025 – 2:56pm

46100563–WSP–DR–CI–11–CBD001_T1.dwg

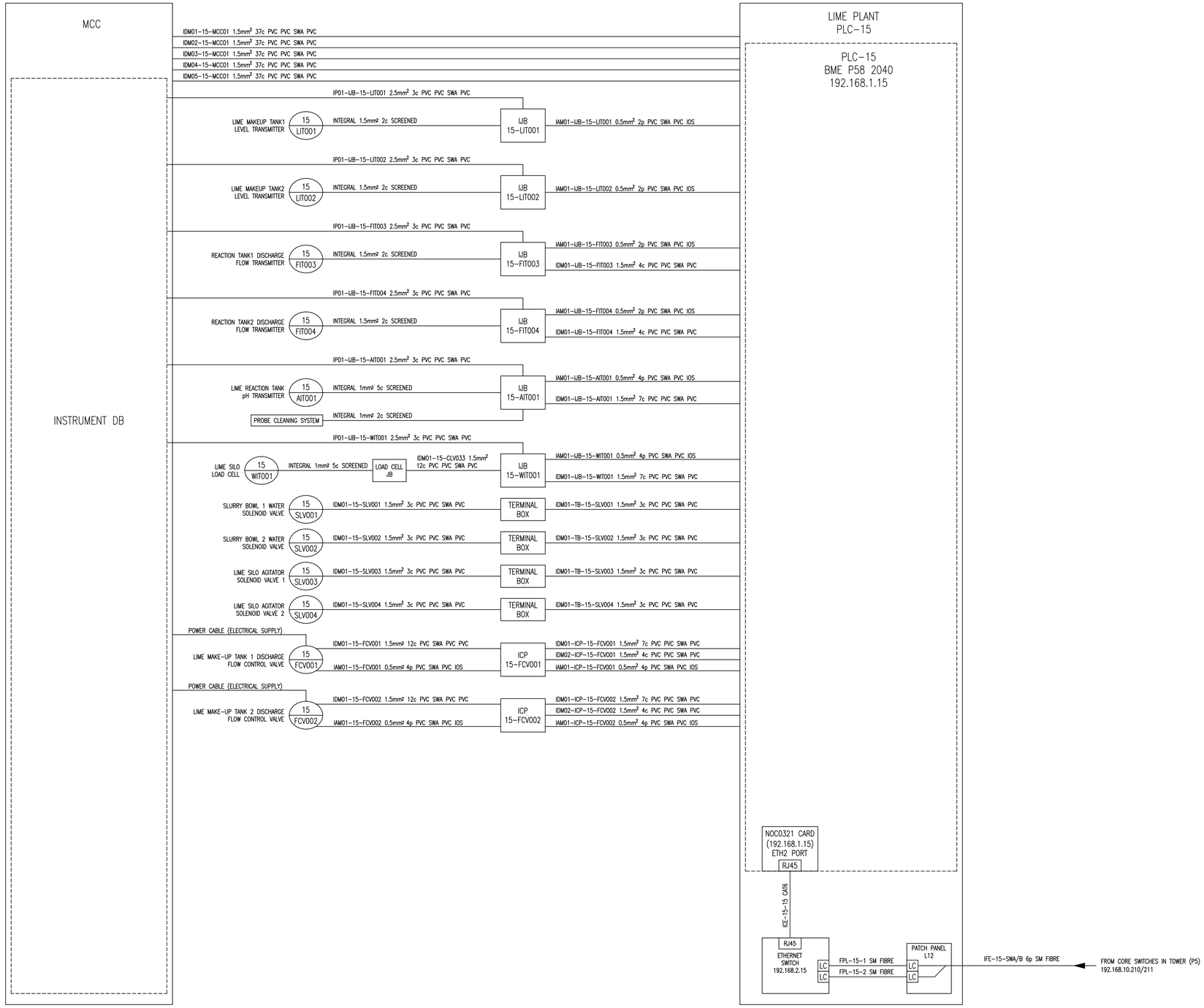

DEPARTMENT	APPROVED	DESIGNATION	DATE

CONSULTING ENGINEERS

ZITHOLELE CONSULTING

ZITHOLELE
P.O. BOX 6002
HALFWAY HOUSE, 1685
TEL: (011) 207 2060
FAX: (086) 674 6121
EMAIL: mail@zitholele.co.za

WSP Group Africa (Pty) Ltd
Building Services
Building C, Knightsbridge,
33 Sloane Street, Bryanston, 2191
Tel: +27 11 361 1300 Fax: +27 11 361 1431 www.wsp.com

SURVEYED	
DESIGNED	W BRITZ
DRAWN	M DYKE
CHECKED	
SERVICES CHECKED	
GEOTECHNICAL INVESTIGATION	
SERVITUDES	
APPROVED	
Pr. Eng. No.	
DATE	

JOHANNESBURG WATER (SOC) LTD

Johannesburg Water

17 HARRISON STREET
MARSHALLTOWN
2107

TEL: (011) 688-1400
FAX: (011) 688-1529

CITY OF JOHANNESBURG

BUSHKOPPIE WASTEWATER TREATMENT WORKS
INFRASTRUCTURE RENEWAL PLAN
UNIT 2 HOW
PLC-15
CABLE BLOCK DIAGRAM

DESIGN MANAGER

DATE

SCALE: NTS

AMENDMENTS		APPROVED	DATE
T0	FOR TENDER	W BRITZ	16.08.21
T1	RE-ISSUED FOR TENDER	CdT	07.01.25

DRAWING No.

JW NUMBER

CONSULTANT'S NUMBER
CI-15-CBD001

FILE No

TO T1

Z:\461000xx\46100563 - Bushkoppie WWTW HOW\51 CI\02-CADD\01-Current\03-Drawings\Cable Block Diagrams\46100563-WSP-DR-CI-15-CBD001_T1.dwg Jan 07, 2025 - 3:01pm

46100563-WSP-DR-CI-15-CBD001_T1.dwg

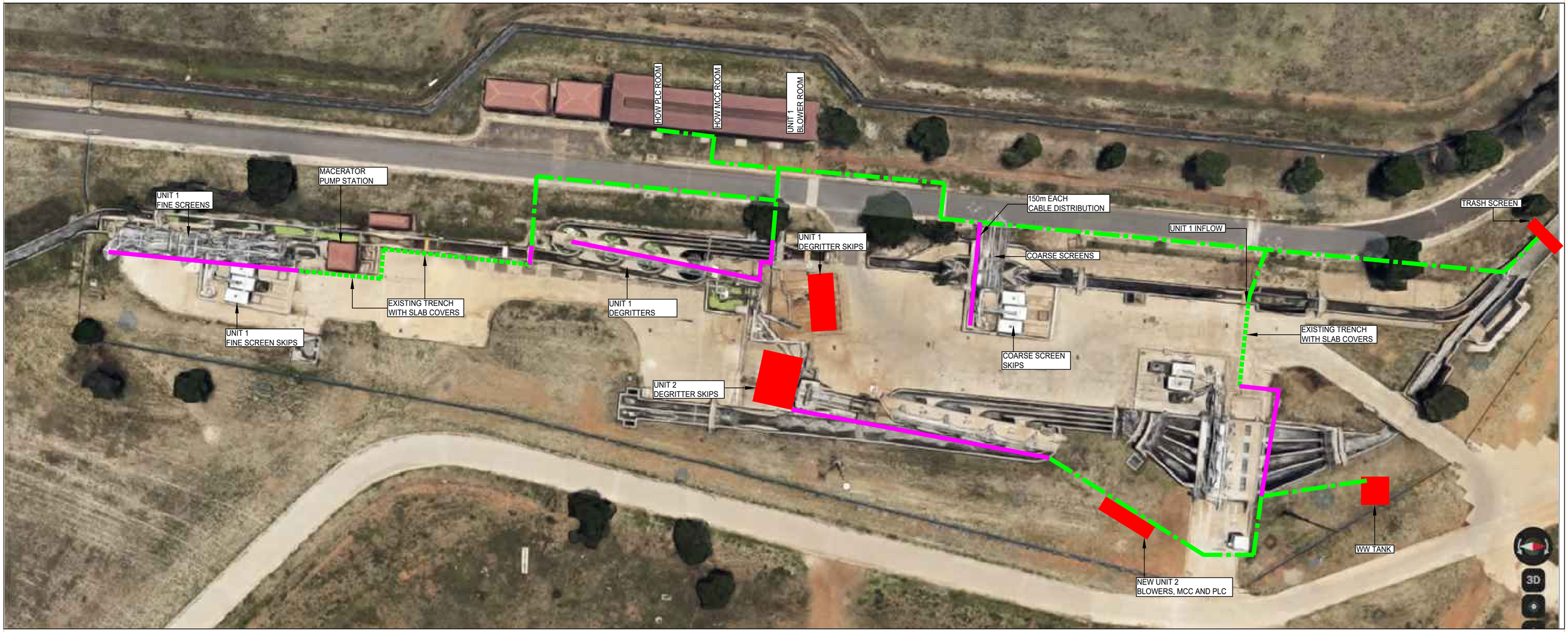

LEGEND:

TRENCH

EXISTING TRENCH

CABLE RACK

DEPARTMENT	APPROVED	DESIGNATION	DATE

CONSULTING ENGINEERS

ZITHOLELE CONSULTING
ZITHOLELE
P.O. BOX 6002
HALFWAY HOUSE, 1685
TEL: (011) 207 2060
FAX: (086) 674 6121
EMAIL: mail@zitholele.co.za

WSP Group Africa (Pty) Ltd
Building Services
Building C, Knightsbridge,
33 Sloane Street, Bryanston, 2191
Tel: +27 11 361 1300
Fax: +27 11 361 1431
www.wsp.com

SURVEYED	
DESIGNED	W BRITZ
DRAWN	M DYKE
CHECKED	
SERVICES CHECKED	
GEOTECHNICAL INVESTIGATION	
SERVITUDES	
APPROVED Pr. Eng. No.	DATE

JOHANNESBURG WATER (SOC) LTD

Johannesburg Water

17 HARRISON STREET
MARSHALLTOWN
2107
TEL: (011) 688-1400
FAX: (011) 688-1529

DESIGN MANAGER

DATE

SCALE

NTS

CITY OF JOHANNESBURG

BUSHKOPPIE WWTW
INFRASTRUCTURE RENEWAL PLAN
HOW
EQUIPMENT AND CABLE ROUTE LAYOUT

AMENDMENTS		BY	DATE
T0	FOR TENDER	W BRITZ	16.08.21
T1	RE-ISSUED FOR TENDER	CdT	07.01.25

DRAWING No.

JW NUMBER

CONSULTANT'S NUMBER
CI-00-CT0001

FILE No

T0 T1

Z:\461000xx\46100563 - Bushkoppie WWTW HOW\51 CI\02-CADD\01-Current\03-Drawings\Site PLan\46100563-WSP-DR-CI-00-CT0001_T1.dwg Jan 09, 2025 - 1:44pm

46100563-WSP-DR-CI-00-CT0001_T1.dwg

LIME PLANT
CABLE ROUTE

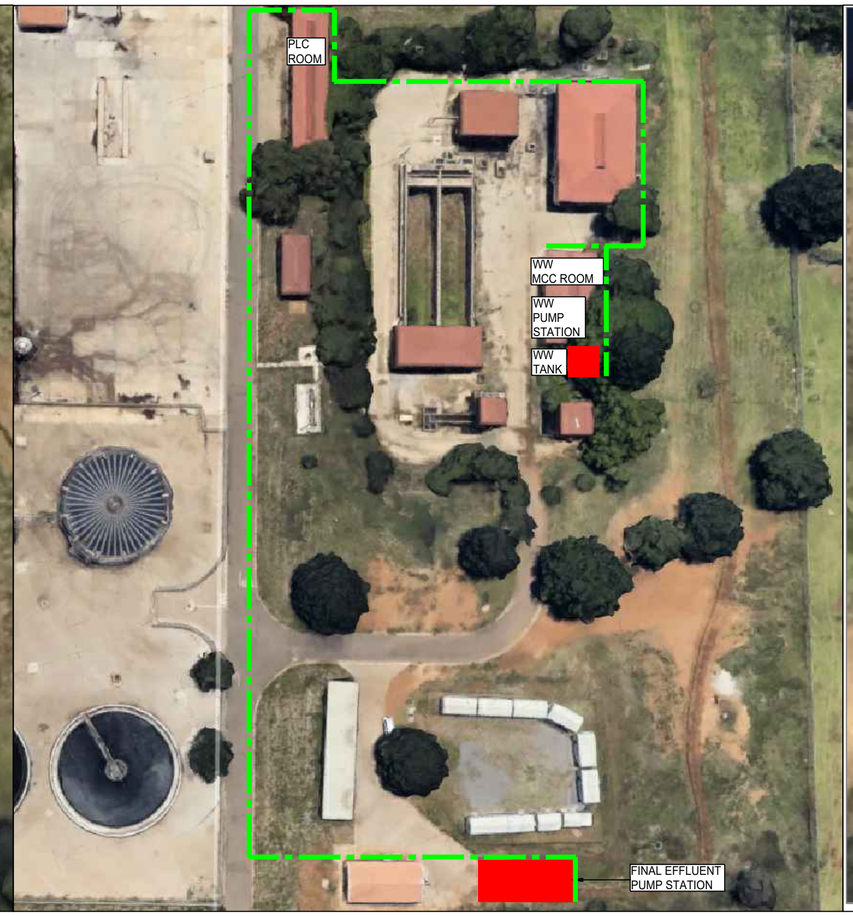

WASH WATER AND FINAL EFFLUENT
CABLE ROUTE

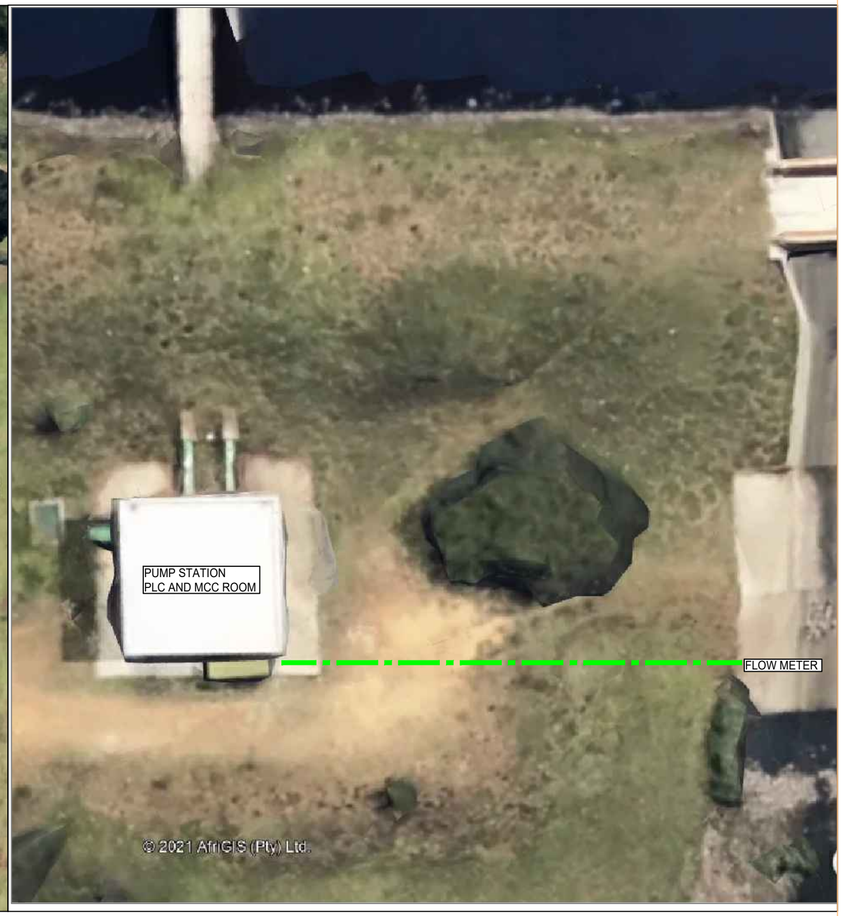

EMERGENCY DAM
CABLE ROUTE

LEGEND:

TRENCH

EXISTING TRENCH

DEPARTMENT	APPROVED	DESIGNATION	DATE
CABLE RACK			

CONSULTING ENGINEERS

ZITHOLELE CONSULTING

ZITHOLELE
P.O. BOX 6002
HALFWAY HOUSE, 1685
TEL: (011) 207 2060
FAX: (086) 674 6121
EMAIL: mail@zitholele.co.za

WSP Group Africa (Pty) Ltd
Building Services

Building C, Knightsbridge,
33 Sloane Street, Bryanston, 2191
Tel: +27 11 361 1300
Fax: +27 11 361 1431
www.wsp.com

SURVEYED	
DESIGNED	W BRITZ
DRAWN	M DYKE
CHECKED	
SERVICES CHECKED	
GEOTECHNICAL INVESTIGATION	
SERVITUDES	
APPROVED Pr. Eng. No.	DATE

JOHANNESBURG WATER (SOC) LTD

Johannesburg Water

17 HARRISON STREET
MARSHALLTOWN
2107
TEL: (011) 688-1400
FAX: (011) 688-1529

DESIGN MANAGER

DATE

SCALE

NTS

CITY OF JOHANNESBURG

BUSHKOPPIE WWTW
INFRASTRUCTURE RENEWAL PLAN
LIME PLANT, WASH WATER, FINAL EFFLUENT
AND EMERGENCY DAM
EQUIPMENT LAYOUT AND CABLE ROUTE

AMENDMENTS		BY	DATE
T0	FOR TENDER	W BRITZ	16.08.21
T1	REOISSUED FOR TENDER	CdT	07.01.25

DRAWING No.

JW NUMBER

CONSULTANT'S NUMBER
CI–00–CT0002

FILE No

T0 T1

Z:\461000xx\46100563 - Bushkoppie WWTW HOW\51 CI\02-CADD\01-Current\03-Drawings\Site PLan\46100563-WSP-DR-CI-00-CT0002_T1.dwg Jan 09, 2025 - 1:46pm

46100563-WSP-DR-CI-00-CT0002_T1.dwg

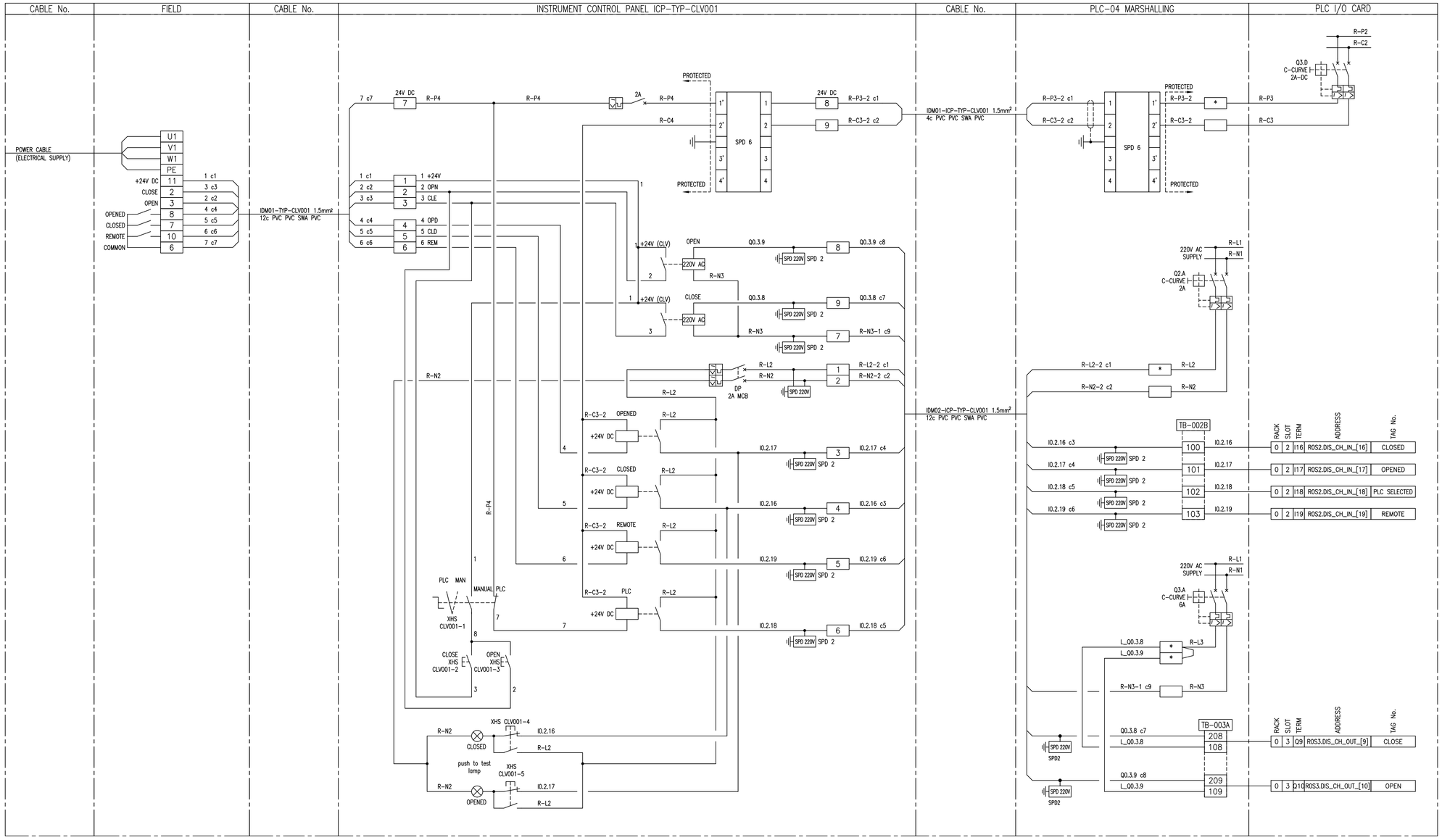

NOTES:

1. EARTH CORE MUST BE YELLOW/GREEN OR IT MUST BE FITTED WITH A YELLOW/GREEN SLEEVE.

SUB-BASE 1: ABE-7S16E2M0: 230V AC DIGITAL INPUT

SUB-BASE 2: ABE-7CPA02: 8ch ANALOG INPUT

SUB-BASE 3: ABE-7R16S210: RELAY OUTPUT

SUB-BASE 4: ABE-7CPA21: 4ch ANALOG OUTPUT

SPD 1: DEHNguard DG M TN 275

SPD 2: DEHNguard DG S 275 VA

SPD 3: BLITZDUCTOR BXT ML4 BD 24 + BASE BXT BAS

SPD 4: BLITZDUCTOR BXT ML2 BD S 24 + BASE BXT BAS

SPD 5: BLITZDUCTOR BXT ML4 BE 24 + BASE BXT BAS

SPD 6: BLITZDUCTOR BXT ML2 BE S 24 + BASE BXT BAS

* FUSED TERMINAL (500mA)

LINK TERMINAL

DEPARTMENT	APPROVED	DESIGNATION	DATE

CONSULTING ENGINEERS

Knight Piésold CONSULTING
P.O. BOX 221
RIVONIA
2128
TEL. 011-806 7111
FAX. 011-806 7100
EMAIL enquiries@kprsa.co.za

WSP Group Africa (Pty) Ltd
Industrial Division
Building C, Knightsbridge,
33 Sloane Street, Bryanston, 2191
Tel: +27 11 361 1300 Fax: +27 11 361 1431 www.wsp.com

SURVEYED	
DESIGNED	W BRITZ
DRAWN	M DYKE
CHECKED	W BRITZ
SERVICES CHECKED	
GEOTECHNICAL INVESTIGATION	
SERVITUDES	
APPROVED	
Pr. Eng. No.	
DATE	

JOHANNESBURG WATER SOC LTD

Johannesburg Water

17 HARRISON STREET
MARSHALLTOWN
2107

TEL: (011) 688-1400
FAX: (011) 688-1529

CITY OF JOHANNESBURG

BUSHKOPPIE WASTEWATER TREATMENT WORKS

INFRASTURCTURE RENEWAL PLAN

OPEN/CLOSE VALVE – CLV001

TYPICAL LOOP DIAGRAM

DESIGN MANAGER

DATE

SCALE: NTS

AMENDMENTS

		APPROVED	DATE
T0	ISSUED FOR TENDER	W BRITZ	08.08.19
T1	RE-ISSUED FOR TENDER	CdT	07.01.25

DRAWING No.

JW NUMBER

CONSULTANT'S NUMBER
TYP-CLV001

FILE No

T0 T1

Z:\461000xx\46100563 – Bushkoppie WWTW HOW\51 CI\02-CADD\01-Current\03-Drawings\Typical Loops\46100563-WSP-DR-CI-TYP-CLV001 rev11.dwg Jan 09, 2025 – 10:57am

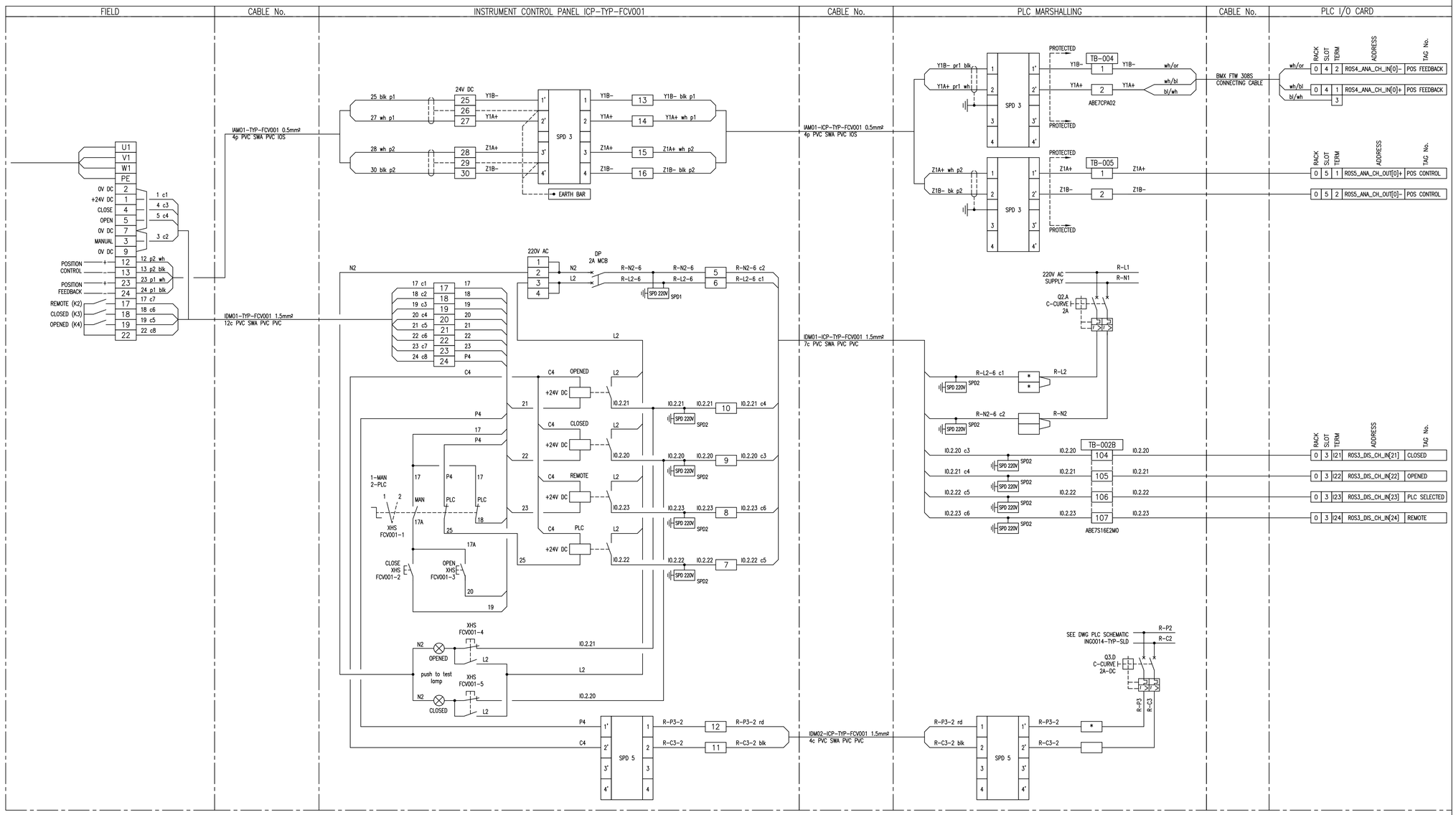

NOTES:

1. EARTH CORE MUST BE YELLOW/GREEN OR IT MUST BE FITTED WITH A YELLOW/GREEN SLEEVE.

SUB-BASE 1: ABE-7S16E2M0: 230V AC DIGITAL INPUT

SUB-BASE 2: ABE-7CPA02: 8ch ANALOG INPUT

SUB-BASE 3: ABE-7R16S210: RELAY OUTPUT

SUB-BASE 4: ABE-7CPA21: 4ch ANALOG OUTPUT

SPD 1: DEHNguard DG M TN 275

SPD 2: DEHNguard DG S 275 VA

SPD 3: BLITZDUCTOR BXT ML4 BD 24 + BASE BXT BAS

SPD 4: BLITZDUCTOR BXT ML2 BD S 24 + BASE BXT BAS

SPD 5: BLITZDUCTOR BXT ML4 BE 24 + BASE BXT BAS

SPD 6: BLITZDUCTOR BXT ML2 BE S 24 + BASE BXT BAS

* FUSED TERMINAL (500mA)

LINK TERMINAL

DEPARTMENT	APPROVED	DESIGNATION	DATE

CONSULTING ENGINEERS

Knight Piésold CONSULTING
P.O. BOX 221
RIVONIA
2128
TEL. 011-806 7111
FAX. 011-806 7100
EMAIL enquiries@kprsa.co.za

WSP Group Africa (Pty) Ltd
Industrial Division
Building C, Knightsbridge,
33 Sloane Street, Bryanston, 2191
Tel: +27 11 361 1300 Fax: +27 11 361 1431 www.wsp.com

SURVEYED	
DESIGNED	W BRITZ
DRAWN	M DYKE
CHECKED	W BRITZ
SERVICES CHECKED	
GEOTECHNICAL INVESTIGATION	
SERVITUDES	
APPROVED	
Pr. Eng. No.	
DATE	

JOHANNESBURG WATER SOC LTD

Johannesburg Water
17 HARRISON STREET
MARSHALLTOWN
2107
TEL: (011) 688-1400
FAX: (011) 688-1529

CITY OF JOHANNESBURG

BUSHKOPPIE WASTEWATER TREATMENT WORKS

INFRASTURCTURE RENEWAL PLAN

FLOW CONTROL VALVE – FCV001

TYPICAL LOOP DIAGRAM

DESIGN MANAGER

DATE

SCALE: NTS

AMENDMENTS

		APPROVED	DATE
T0	ISSUED FOR TENDER	W BRITZ	08.08.19
T1	RE-ISSUED FOR TENDER	CdT	07.01.25

DRAWING No.

JW NUMBER

CONSULTANT'S NUMBER: TYP-FCV001

FILE No

T0 T1

Z:\461000xx\46100563 – Bushkoppie WWTW HOW\51 CI\02-CADD\01-Current\03-Drawings\Typical Loops\46100563-WSP-DR-CI-TYP-FCV001 revT1.dwg Jan 09, 2025 – 10:55am

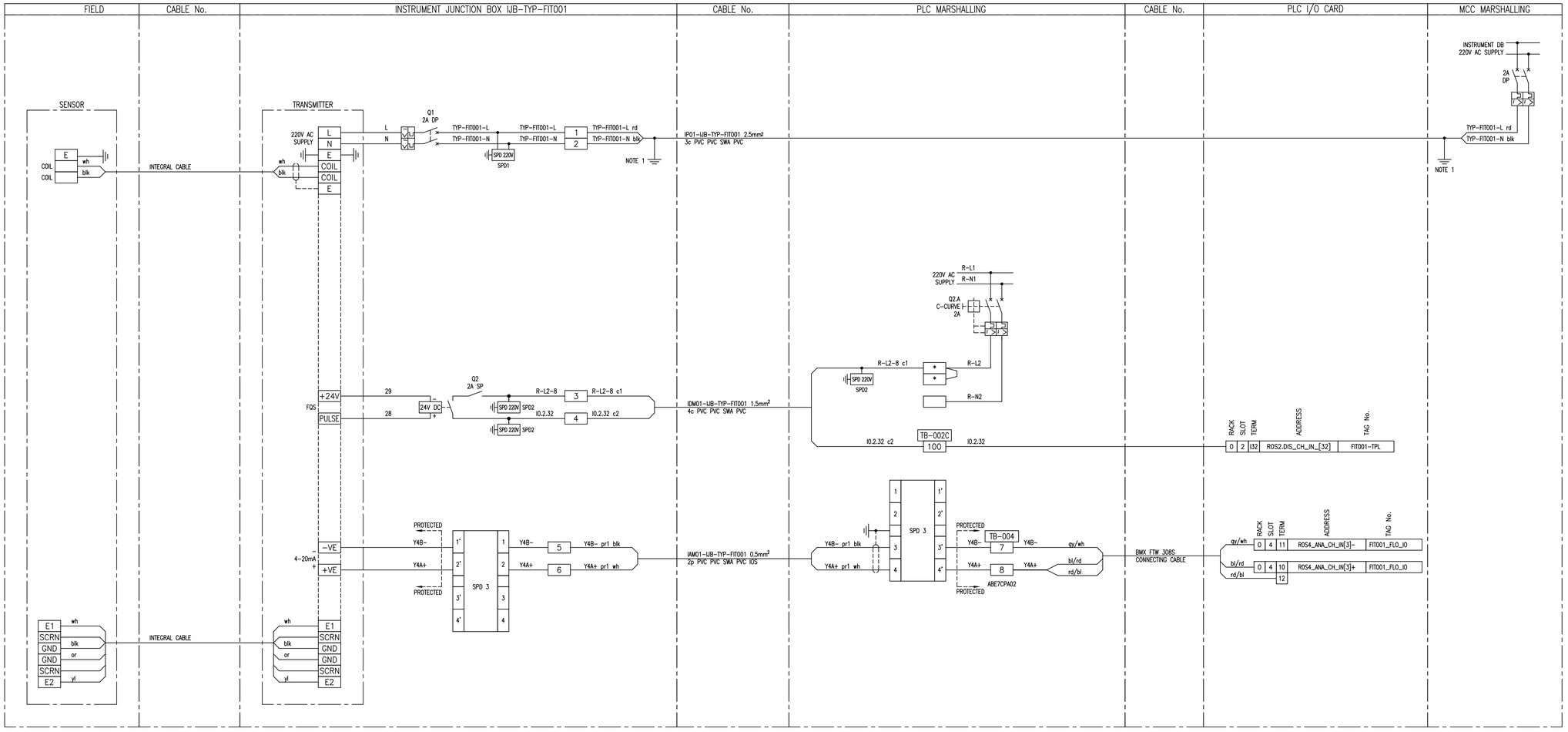

NOTES:

1. EARTH CORE MUST BE YELLOW/GREEN OR IT MUST BE FITTED WITH A YELLOW/GREEN SLEEVE.

SUB-BASE 1: ABE-7S16E2M0: 230V AC DIGITAL INPUT

SUB-BASE 2: ABE-7CPA02: 8ch ANALOG INPUT

SUB-BASE 3: ABE-7R16S210: RELAY OUTPUT

SUB-BASE 4: ABE-7CPA21: 4ch ANALOG OUTPUT

SPD 1: DEHNguard DG M TN 275

SPD 2: DEHNguard DG S 275 VA

SPD 3: BLITZDUCTOR BXT ML4 BD 24 + BASE BXT BAS

SPD 4: BLITZDUCTOR BXT ML2 BD S 24 + BASE BXT BAS

SPD 5: BLITZDUCTOR BXT ML4 BE 24 + BASE BXT BAS

SPD 6: BLITZDUCTOR BXT ML2 BE S 24 + BASE BXT BAS

*	FUSED TERMINAL (500mA)
	LINK TERMINAL

DEPARTMENT	APPROVED	DESIGNATION	DATE

CONSULTING ENGINEERS

Knight Piésold CONSULTING
P.O. BOX 221
RIVONIA
2128
TEL. 011-806 7111
FAX. 011-806 7100
EMAIL enquiries@kprsa.co.za

WSP Group Africa (Pty) Ltd
Industrial Division
Building C, Knightsbridge,
33 Sloane Street, Bryanston, 2191
Tel: +27 11 361 1300 Fax: +27 11 361 1431 www.wsp.com

SURVEYED	
DESIGNED	W BRITZ
DRAWN	M DYKE
CHECKED	W BRITZ
SERVICES CHECKED	
GEOTECHNICAL INVESTIGATION	
SERVITUDES	
APPROVED	
Pr. Eng. No.	
DATE	

JOHANNESBURG WATER SOC LTD

Johannesburg Water

17 HARRISON STREET
MARSHALLTOWN
2107

TEL: (011) 688-1400
FAX: (011) 688-1529

CITY OF JOHANNESBURG

BUSHKOPPIE WASTEWATER TREATMENT WORKS
INFRASTURCTURE RENEWAL PLAN

MAGFLOW METER – FIT001
TYPICAL LOOP DIAGRAM

DESIGN MANAGER

DATE

SCALE: NTS

AMENDMENTS

		APPROVED	DATE
T0	ISSUED FOR TENDER	W BRITZ	08.08.19
T1	RE-ISSUED FOR TENDER	CdT	07.01.25

DRAWING No.

JW NUMBER

CONSULTANT'S NUMBER
TYP-FIT001

FILE No

T0 T1

Z:\461000xx\46100563 – Bushkoppie WWTW HOW\51 CI\02-CADD\01-Current\03-Drawings\Typical Loops\46100563-WSP-DR-CI-TYP-FIT001 (magflow) revT1.dwg Jan 09, 2025 – 10:54am

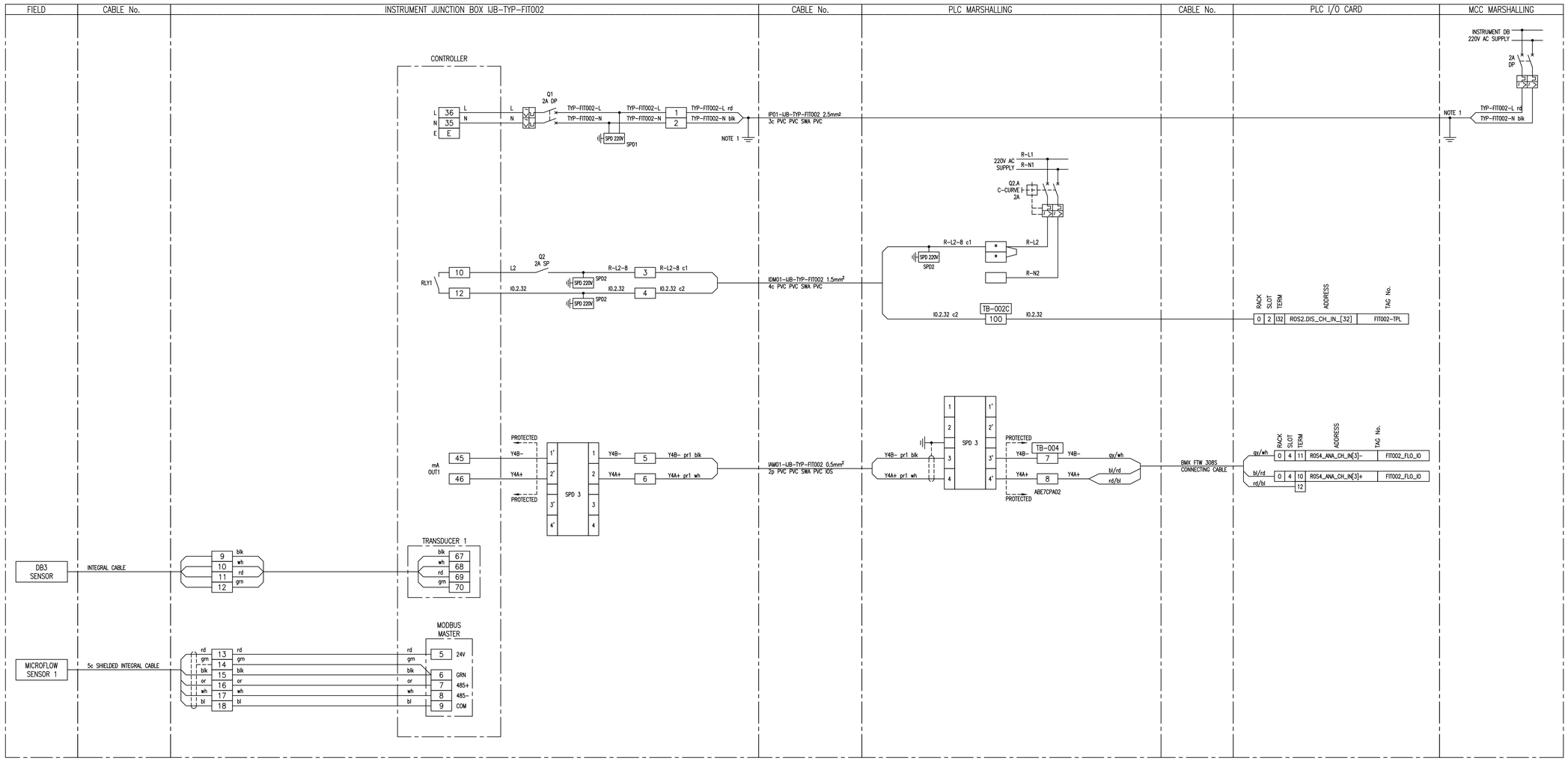

NOTES:

1. EARTH CORE MUST BE YELLOW/GREEN OR IT MUST BE FITTED WITH A YELLOW/GREEN SLEEVE.

SUB-BASE 1: ABE-7S16E2M0: 230V AC DIGITAL INPUT

SUB-BASE 2: ABE-7CPA02: 8ch ANALOG INPUT

SUB-BASE 3: ABE-7R16S210: RELAY OUTPUT

SUB-BASE 4: ABE-7CPA21: 4ch ANALOG OUTPUT

SPD 1: DEHNguard DG M TN 275

SPD 2: DEHNguard DG S 275 VA

SPD 3: BLITZDUCTOR BXT ML4 BD 24 + BASE BXT BAS

SPD 4: BLITZDUCTOR BXT ML2 BD S 24 + BASE BXT BAS

SPD 5: BLITZDUCTOR BXT ML4 BE 24 + BASE BXT BAS

SPD 6: BLITZDUCTOR BXT ML2 BE S 24 + BASE BXT BAS

*	FUSED TERMINAL (500mA)
	LINK TERMINAL

DEPARTMENT	APPROVED	DESIGNATION	DATE

CONSULTING ENGINEERS

Knight Piésold CONSULTING
P.O. BOX 221
RIVONIA
2128
TEL. 011-806 7111
FAX. 011-806 7100
EMAIL enquiries@kprsa.co.za

WSP Group Africa (Pty) Ltd
Industrial Division
Building C, Knightsbridge,
33 Sloane Street, Bryanston, 2191
Tel: +27 11 361 1300 Fax: +27 11 361 1431 www.wsp.com

SURVEYED	
DESIGNED	W BRITZ
DRAWN	M DYKE
CHECKED	W BRITZ
SERVICES CHECKED	
GEOTECHNICAL INVESTIGATION	
SERVITUDES	
APPROVED	
Pr. Eng. No.	
DATE	

JOHANNESBURG WATER SOC LTD

Johannesburg Water

17 HARRISON STREET
MARSHALLTOWN
2107

TEL: (011) 688-1400
FAX: (011) 688-1529

CITY OF JOHANNESBURG

BUSHKOPPIE WASTEWATER TREATMENT WORKS
INFRASTURCTURE RENEWAL PLAN

AREA VELOCITY FLOW METER – FIT002
TYPICAL LOOP DIAGRAM

DESIGN MANAGER

DATE

SCALE: NTS

AMENDMENTS		APPROVED	DATE
T0	ISSUED FOR TENDER	W BRITZ	08.08.19
T1	RE-ISSUED FOR TENDER	CdT	07.01.25

DRAWING No.

JW NUMBER

CONSULTANT'S NUMBER
TYP-FIT002

FILE No

T0 T1

Z:\461000xx\46100563 – Bushkoppie WWTW HOW\51 CI\02-CADD\01-Current\03-Drawings\Typical Loops\46100563-WSP-DR-CI-TYP-FIT002 (area velocity) revT1.dwg Jan 09, 2025 – 10:54am

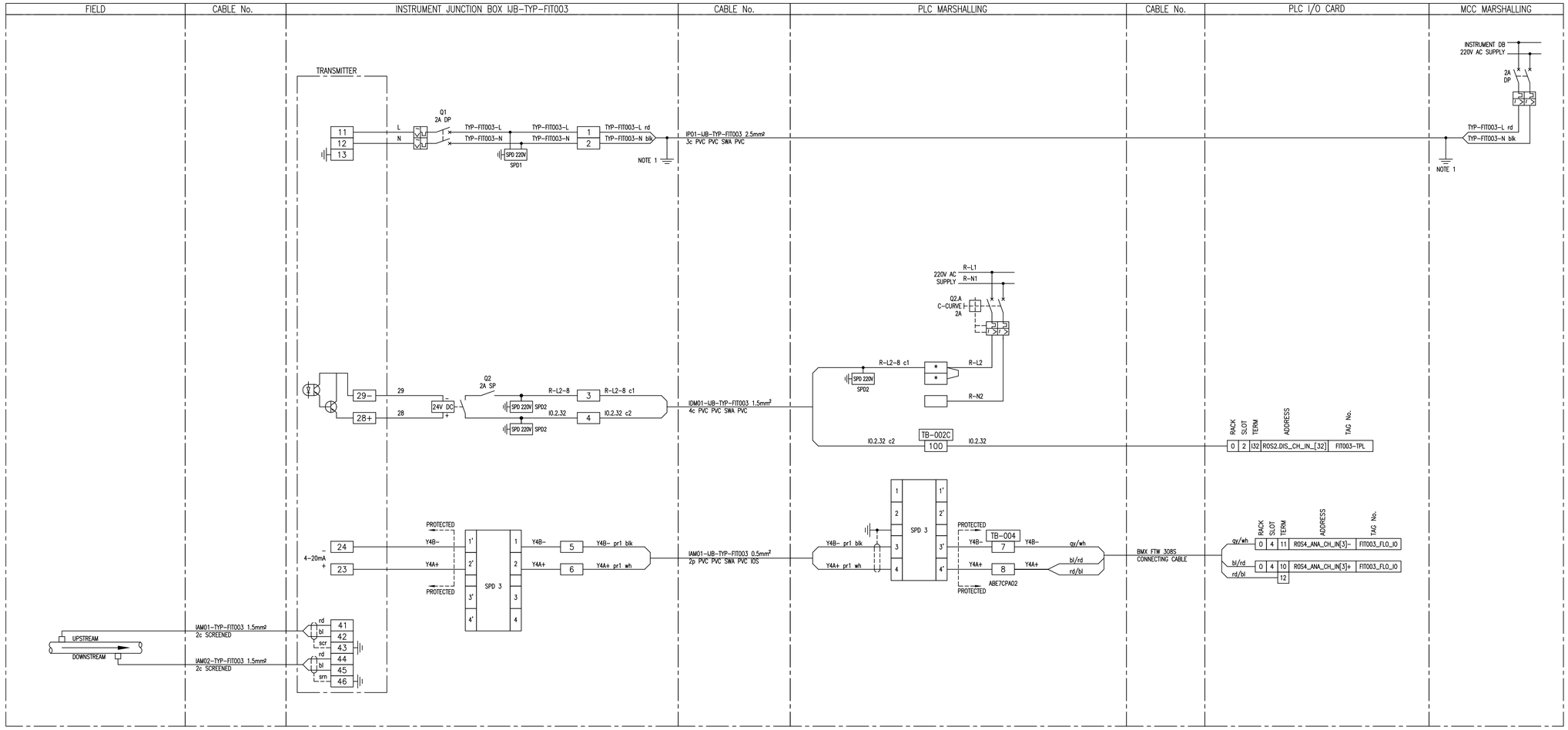

NOTES:

1. EARTH CORE MUST BE YELLOW/GREEN OR IT MUST BE FITTED WITH A YELLOW/GREEN SLEEVE.

SUB-BASE 1: ABE-7S16E2M0: 230V AC DIGITAL INPUT

SUB-BASE 2: ABE-7CPA02: 8ch ANALOG INPUT

SUB-BASE 3: ABE-7R16S210: RELAY OUTPUT

SUB-BASE 4: ABE-7CPA21: 4ch ANALOG OUTPUT

SPD 1: DEHNguard DG M TN 275

SPD 2: DEHNguard DG S 275 VA

SPD 3: BLITZDUCTOR BXT ML4 BD 24 + BASE BXT BAS

SPD 4: BLITZDUCTOR BXT ML2 BD S 24 + BASE BXT BAS

SPD 5: BLITZDUCTOR BXT ML4 BE 24 + BASE BXT BAS

SPD 6: BLITZDUCTOR BXT ML2 BE S 24 + BASE BXT BAS

[*] FUSED TERMINAL (500mA)

[ ] LINK TERMINAL

DEPARTMENT	APPROVED	DESIGNATION	DATE

CONSULTING ENGINEERS

Knight Piésold CONSULTING
P.O. BOX 221
RIVONIA
2128
TEL. 011-806 7111
FAX. 011-806 7100
EMAIL enquiries@kprsa.co.za

WSP Group Africa (Pty) Ltd
Industrial Division
Building C, Knightsbridge,
33 Sloane Street, Bryanston, 2191
Tel: +27 11 361 1300 Fax: +27 11 361 1431 www.wsp.com

SURVEYED	
DESIGNED	W BRITZ
DRAWN	M DYKE
CHECKED	W BRITZ
SERVICES CHECKED	
GEOTECHNICAL INVESTIGATION	
SERVITUDES	
APPROVED	
Pr. Eng. No.	
DATE	

JOHANNESBURG WATER SOC LTD

Johannesburg Water

17 HARRISON STREET
MARSHALLTOWN
2107

TEL: (011) 688-1400
FAX: (011) 688-1529

CITY OF JOHANNESBURG

BUSHKOPPIE WASTEWATER TREATMENT WORKS

INFRASTURCTURE RENEWAL PLAN

CLAMP-ON FLOW METER – FIT003

TYPICAL LOOP DIAGRAM

DESIGN MANAGER

DATE

SCALE: NTS

AMENDMENTS

		APPROVED	DATE
T0	ISSUED FOR TENDER	W BRITZ	08.08.19
T1	RE-ISSUED FOR TENDER	CdT	07.01.25

DRAWING No.

JW NUMBER

CONSULTANT'S NUMBER
TYP-FIT003

FILE No

T0 T1

Z:\461000xx\46100563 – Bushkoppie WWTW HOW\51 CI\02-CADD\01-Current\03-Drawings\Typical Loops\46100563-WSP-DR-CI-TYP-FIT003 (clamp on) revT1.dwg Jan 09, 2025 – 10:53am

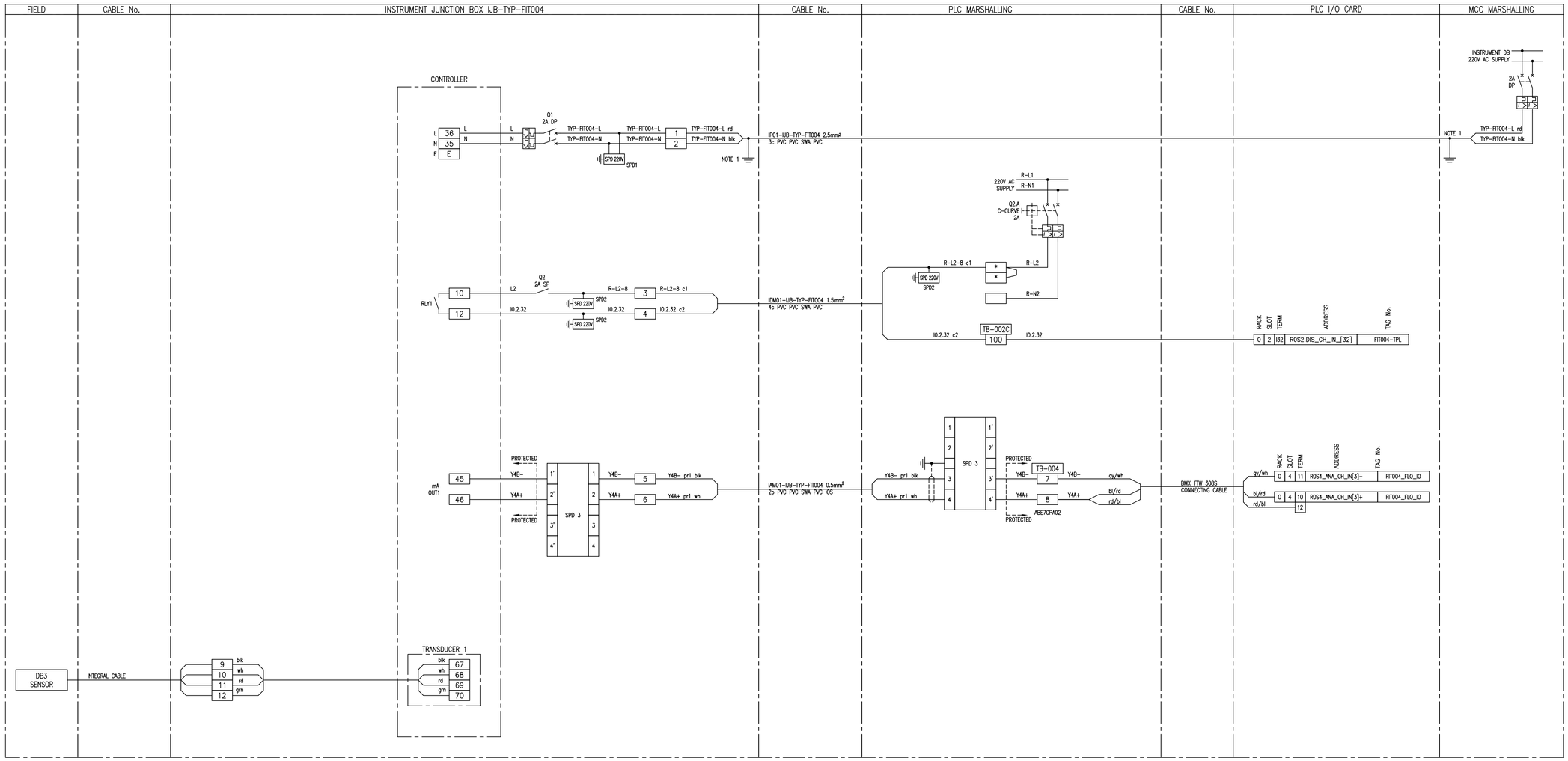

NOTES:

1. EARTH CORE MUST BE YELLOW/GREEN OR IT MUST BE FITTED WITH A YELLOW/GREEN SLEEVE.

SUB-BASE 1: ABE-7S16E2M0: 230V AC DIGITAL INPUT

SUB-BASE 2: ABE-7CPA02: 8ch ANALOG INPUT

SUB-BASE 3: ABE-7R16S210: RELAY OUTPUT

SUB-BASE 4: ABE-7CPA21: 4ch ANALOG OUTPUT

SPD 1: DEHNguard DG M TN 275

SPD 2: DEHNguard DG S 275 VA

SPD 3: BLITZDUCTOR BXT ML4 BD 24 + BASE BXT BAS

SPD 4: BLITZDUCTOR BXT ML2 BD S 24 + BASE BXT BAS

SPD 5: BLITZDUCTOR BXT ML4 BE 24 + BASE BXT BAS

SPD 6: BLITZDUCTOR BXT ML2 BE S 24 + BASE BXT BAS

*	FUSED TERMINAL (500mA)
	LINK TERMINAL

DEPARTMENT	APPROVED	DESIGNATION	DATE

CONSULTING ENGINEERS

Knight Piésold CONSULTING
P.O. BOX 221
RIVONIA
2128
TEL. 011-806 7111
FAX. 011-806 7100
EMAIL enquiries@kprsa.co.za

WSP Group Africa (Pty) Ltd
Industrial Division
Building C, Knightsbridge,
33 Sloane Street, Bryanston, 2191
Tel: +27 11 361 1300 Fax: +27 11 361 1431 www.wsp.com

SURVEYED	
DESIGNED	W BRITZ
DRAWN	M DYKE
CHECKED	W BRITZ
SERVICES CHECKED	
GEOTECHNICAL INVESTIGATION	
SERVITUDES	
APPROVED	
Pr. Eng. No.	
DATE	

JOHANNESBURG WATER SOC LTD

Johannesburg Water

17 HARRISON STREET
MARSHALLTOWN
2107

TEL: (011) 688-1400
FAX: (011) 688-1529

CITY OF JOHANNESBURG

BUSHKOPPIE WASTEWATER TREATMENT WORKS
INFRASTURCTURE RENEWAL PLAN

FLUME FLOW METER – FIT004
TYPICAL LOOP DIAGRAM

DESIGN MANAGER

DATE

SCALE: NTS

AMENDMENTS

		APPROVED	DATE
T0	ISSUED FOR TENDER	W BRITZ	08.08.19
T1	RE-ISSUED FOR TENDER	CdT	07.01.25

DRAWING No.

JW NUMBER

CONSULTANT'S NUMBER
TYP-FIT004

FILE No

TO T1

Z:\461000xx\46100563 – Bushkoppie WWTW HOW\51 CI\02-CADD\01-Current\03-Drawings\Typical Loops\46100563-WSP-DR-CI-TYP-FIT004 (flume) revT1.dwg Jan 09, 2025 – 10:52am

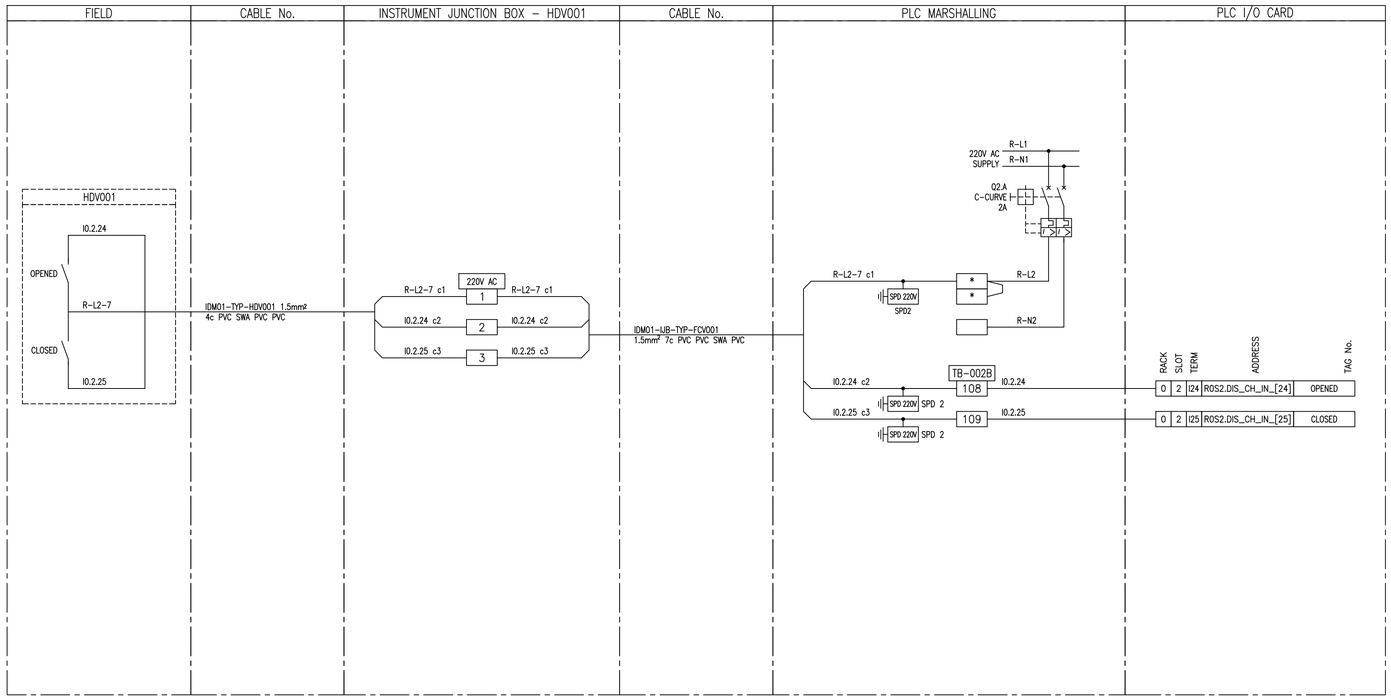

NOTES:

1. EARTH CORE MUST BE YELLOW/GREEN OR IT MUST BE FITTED WITH A YELLOW/GREEN SLEEVE.

SUB-BASE 1: ABE-7S16E2M0: 230V AC DIGITAL INPUT

SUB-BASE 2: ABE-7CPA02: 8ch ANALOG INPUT

SUB-BASE 3: ABE-7R16S210: RELAY OUTPUT

SUB-BASE 4: ABE-7CPA21: 4ch ANALOG OUTPUT

SPD 1: DEHNguard DG M TN 275

SPD 2: DEHNguard DG S 275 VA

SPD 3: BLITZDUCTOR BXT ML4 BD 24 + BASE BXT BAS

SPD 4: BLITZDUCTOR BXT ML2 BD S 24 + BASE BXT BAS

SPD 5: BLITZDUCTOR BXT ML4 BE 24 + BASE BXT BAS

SPD 6: BLITZDUCTOR BXT ML2 BE S 24 + BASE BXT BAS

[*] FUSED TERMINAL (500mA)

[ ] LINK TERMINAL

DEPARTMENT	APPROVED	DESIGNATION	DATE

CONSULTING ENGINEERS

Knight Piésold CONSULTING
P.O. BOX 221
RIVONIA
2128
TEL. 011-806 7111
FAX. 011-806 7100
EMAIL enquiries@kprsa.co.za

WSP Group Africa (Pty) Ltd
Industrial Division
Building C, Knightsbridge,
33 Sloane Street, Bryanston, 2191
Tel: +27 11 361 1300 Fax: +27 11 361 1431 www.wsp.com

SURVEYED	
DESIGNED	W BRITZ
DRAWN	M DYKE
CHECKED	W BRITZ
SERVICES CHECKED	
GEOTECHNICAL INVESTIGATION	
SERVITUDES	
APPROVED	
Pr. Eng. No.	
DATE	

JOHANNESBURG WATER SOC LTD

Johannesburg Water

17 HARRISON STREET
MARSHALLTOWN
2107

TEL: (011) 688-1400
FAX: (011) 688-1529

CITY OF JOHANNESBURG

BUSHKOPPIE WASTEWATER TREATMENT WORKS

INFRASTRUCTURE RENEWAL PLAN

HAND VALVE – HDV001

TYPICAL LOOP DIAGRAM

DESIGN MANAGER

DATE

SCALE

NTS

AMENDMENTS

		APPROVED	DATE
T0	ISSUED FOR TENDER	W BRITZ	08.08.19
T1	RE-ISSUED FOR TENDER	CdT	07.01.25

DRAWING No.

JW NUMBER

CONSULTANT'S NUMBER
CI-TYP-HDV001

FILE No

T0 T1

Z:\461000xx\46100563 – Bushkoppie WWTW HOW\51 CI\02-CADD\01-Current\03-Drawings\Typical Loops\46100563-WSP-DR-CI-TYP-HDV001 rev T1.dwg Jan 07, 2025 – 3:33pm

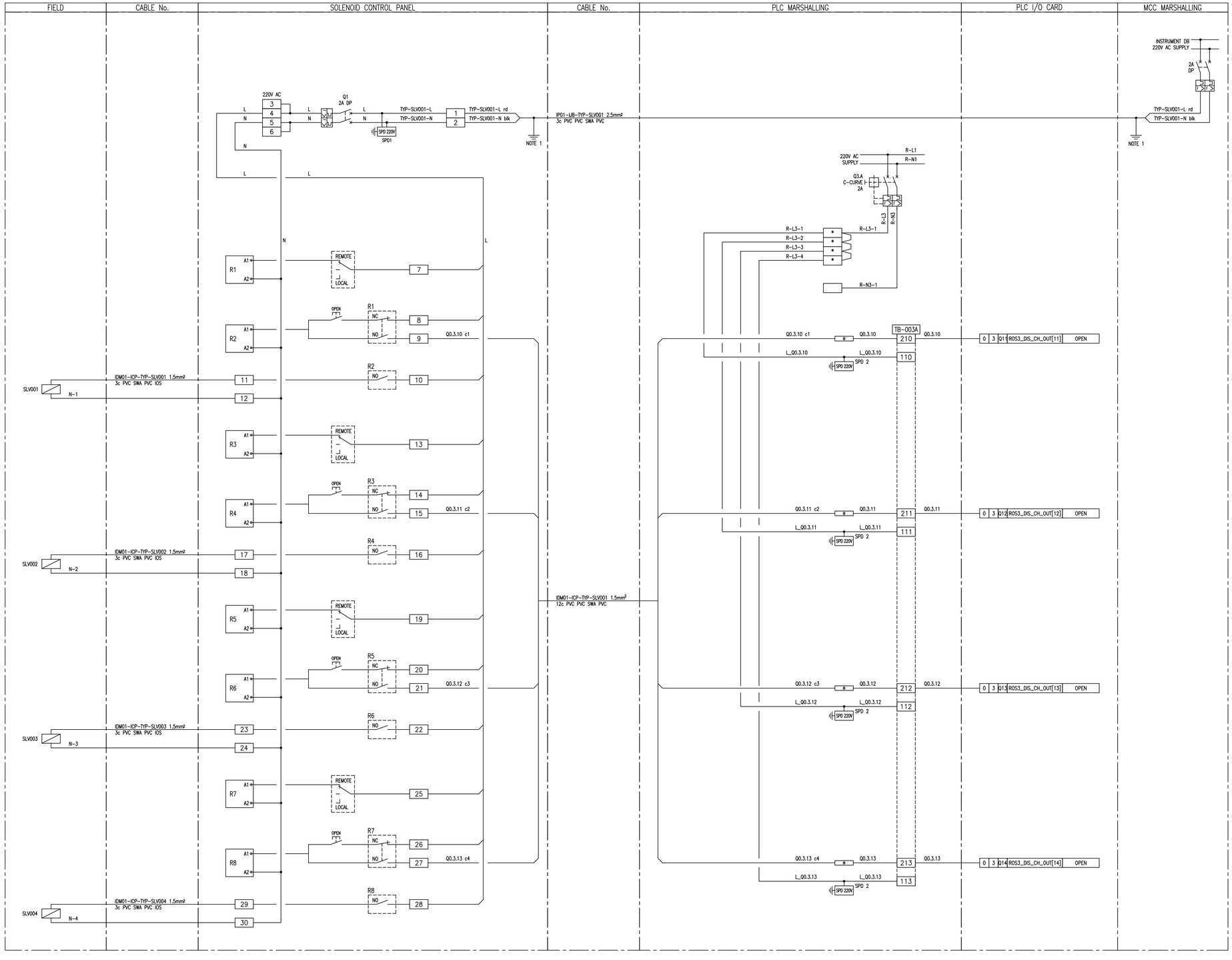

NOTES:

1. EARTH CORE MUST BE YELLOW/GREEN OR IT MUST BE FITTED WITH A YELLOW/GREEN SLEEVE.

SUB-BASE 1: ABE-7S16E2M0: 230V AC DIGITAL INPUT

SUB-BASE 2: ABE-7CPA02: 8ch ANALOG INPUT

SUB-BASE 3: ABE-7R16S210: RELAY OUTPUT

SUB-BASE 4: ABE-7CPA21: 4ch ANALOG OUTPUT

SPD 1: DEHNguard DG M TN 275

SPD 2: DEHNguard DG S 275 VA

SPD 3: BLITZDUCTOR BXT ML4 BD 24 + BASE BXT BAS

SPD 4: BLITZDUCTOR BXT ML2 BD S 24 + BASE BXT BAS

SPD 5: BLITZDUCTOR BXT ML4 BE 24 + BASE BXT BAS

SPD 6: BLITZDUCTOR BXT ML2 BE S 24 + BASE BXT BAS

* FUSED TERMINAL (500mA)

LINK TERMINAL

DEPARTMENT	APPROVED	DESIGNATION	DATE

CONSULTING ENGINEERS

Knight Piésold CONSULTING
P.O. BOX 221
RIVONIA
2128
TEL. 011-806 7111
FAX. 011-806 7100
EMAIL enquiries@kprsa.co.za

WSP Group Africa (Pty) Ltd
Industrial Division
Building C, Knightsbridge,
33 Sloane Street, Bryanston, 2191
Tel: +27 11 361 1300 Fax: +27 11 361 1431 www.wsp.com

SURVEYED	
DESIGNED	W BRITZ
DRAWN	M DYKE
CHECKED	W BRITZ
SERVICES CHECKED	
GEOTECHNICAL INVESTIGATION	
SERVITUDES	
APPROVED	
Pr. Eng. No.	
DATE	

JOHANNESBURG WATER SOC LTD

Johannesburg Water

17 HARRISON STREET
MARSHALLTOWN
2107

TEL: (011) 688-1400
FAX: (011) 688-1529

CITY OF JOHANNESBURG

BUSHKOPPIE WASTEWATER TREATMENT WORKS

INFRASTRUCTURE RENEWAL PLAN

SOLENOID CONTROL PANEL

TYPICAL LOOP DIAGRAM

DESIGN MANAGER

DATE

SCALE: NTS

AMENDMENTS

		APPROVED	DATE
T0	ISSUED FOR TENDER	W BRITZ	08.08.19
T1	RE-ISSUED FOR TENDER	CdT	07.01.25

DRAWING No.

JW NUMBER

CONSULTANT'S NUMBER
CI-TYP-ICP-SLV001

FILE No

T0 T1

Z:\461000xx\46100563 – Bushkoppie WWTW HOW\51 C\\02-CADD\01-Current\03-Drawings\Typical Loops\46100563-WSP-DR-CI-TYP-ICP-SLV001 revT1.dwg Jan 07, 2025 – 3:31pm

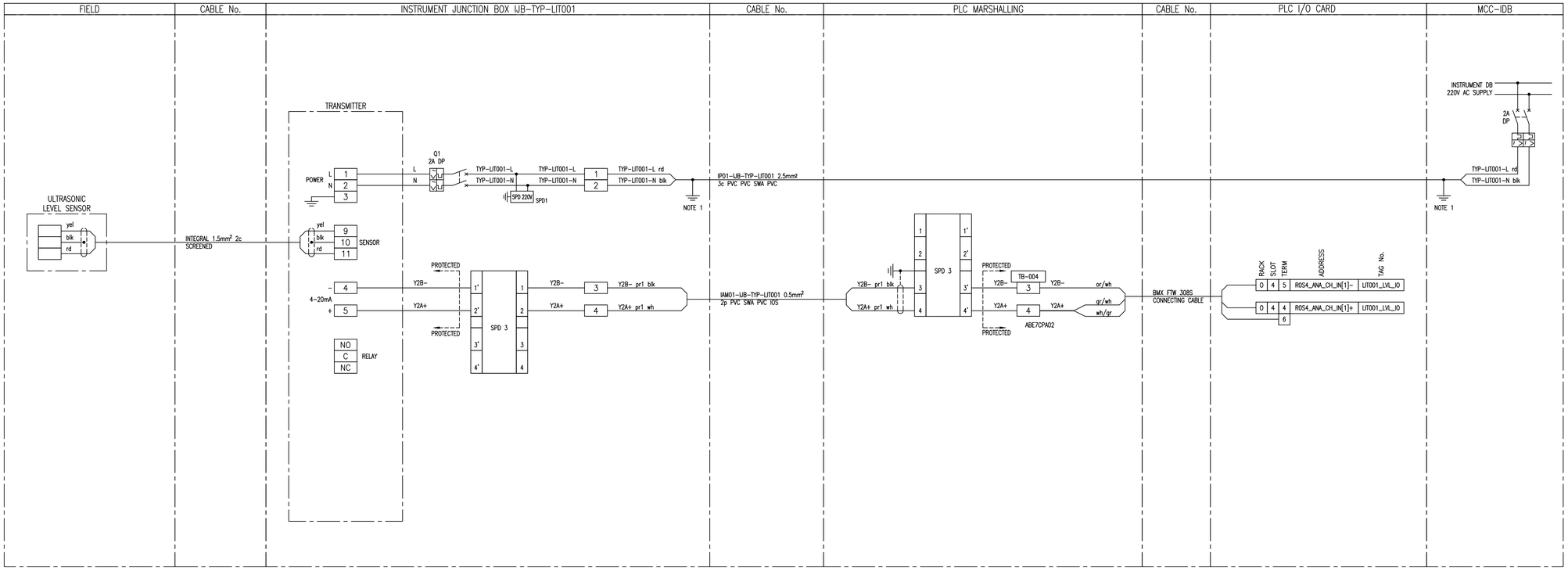

NOTES:

1. EARTH CORE MUST BE YELLOW/GREEN OR IT MUST BE FITTED WITH A YELLOW/GREEN SLEEVE.

SUB-BASE 1: ABE-7S16E2M0: 230V AC DIGITAL INPUT

SUB-BASE 2: ABE-7CPA02: 8ch ANALOG INPUT

SUB-BASE 3: ABE-7R16S210: RELAY OUTPUT

SUB-BASE 4: ABE-7CPA21: 4ch ANALOG OUTPUT

SPD 1: DEHNguard DG M TN 275

SPD 2: DEHNguard DG S 275 VA

SPD 3: BLITZDUCTOR BXT ML4 BD 24 + BASE BXT BAS

SPD 4: BLITZDUCTOR BXT ML2 BD S 24 + BASE BXT BAS

SPD 5: BLITZDUCTOR BXT ML4 BE 24 + BASE BXT BAS

SPD 6: BLITZDUCTOR BXT ML2 BE S 24 + BASE BXT BAS

[*] FUSED TERMINAL (500mA)

[ ] LINK TERMINAL

DEPARTMENT	APPROVED	DESIGNATION	DATE

CONSULTING ENGINEERS

Knight Piésold CONSULTING
P.O. BOX 221
RIVONIA
2128
TEL. 011-806 7111
FAX. 011-806 7100
EMAIL enquiries@kprsa.co.za

WSP Group Africa (Pty) Ltd
Industrial Division
Building C, Knightsbridge,
33 Sloane Street, Bryanston, 2191
Tel: +27 11 361 1300 Fax: +27 11 361 1431 www.wsp.com

SURVEYED	
DESIGNED	W BRITZ
DRAWN	M DYKE
CHECKED	W BRITZ
SERVICES CHECKED	
GEOTECHNICAL INVESTIGATION	
SERVITUDES	
APPROVED	
Pr. Eng. No.	
DATE	

JOHANNESBURG WATER SOC LTD

Johannesburg Water

17 HARRISON STREET
MARSHALLTOWN
2107

TEL: (011) 688-1400
FAX: (011) 688-1529

CITY OF JOHANNESBURG

BUSHKOPPIE WASTEWATER TREATMENT WORKS
INFRASTRUCTURE RENEWAL PLAN

ULTRA SONIC LEVEL TRANSMITTER – LIT001
TYPICAL LOOP DIAGRAM

DESIGN MANAGER

DATE

SCALE: NTS

	AMENDMENTS	APPROVED	DATE
T0	ISSUED FOR TENDER	W BRITZ	08.08.19
T1	RE-ISSUED FOR TENDER	CdT	07.01.25

DRAWING No.

JW NUMBER

CONSULTANT'S NUMBER
CI-TYP-LIT001

FILE No

T0 T1

Z:\461000xx\46100563 – Bushkoppie WWTW HOW\51 C\\02-CADD\01-Current\03-Drawings\Typical Loops\46100563-WSP-DR-CI-TYP-LIT001 revT1.dwg Jan 07, 2025 – 3:26pm

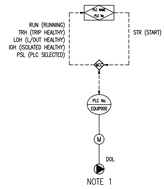

NOTE 1

DOL DRIVE	
SIGNALS	
DI	DO
RUN (RUNNING) TRH (TRIP HEALTHY) LOH (L/OUT HEALTHY) IOH (ISOLATED HEALTHY) PSL (PLC SELECTED)	STR (START)

000 – DENOTES 3 DIGIT EQUIPMENT NUMBER

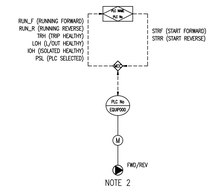

NOTE 2

FORWARD/REVERSE DRIVE	
SIGNALS	
DI	DO
RUN_F (RUNNING FORWARD) RUN_R (RUNNING REVERSE) TRH (TRIP HEALTHY) LOH (L/OUT HEALTHY) IOH (ISOLATED HEALTHY) PSL (PLC SELECTED) TQH (TORQUE HEALTHY)	STRF (START FORWARD) STRR (START REVERSE)

000 – DENOTES 3 DIGIT EQUIPMENT NUMBER

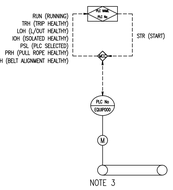

NOTE 3

DRIVE FOR CONVEYORS	
SIGNALS	
DI	DO
RUN (RUNNING) TRH (TRIP HEALTHY) LOH (L/OUT HEALTHY) IOH (ISOLATED HEALTHY) PSL (PLC SELECTED) PRH (PULL ROPE HEALTHY) ALH (BELT ALIGNMENT HEALTHY)	STR (START)

000 – DENOTES 3 DIGIT EQUIPMENT NUMBER

NOTE 4

SUMP PUMPS AND VENTILATION FANS
SIGNALS
DI
RUN (RUNNING) TRH (TRIP HEALTHY)

000 – DENOTES 3 DIGIT EQUIPMENT NUMBER

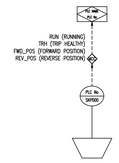

NOTE 5

SKIP
SIGNALS
DI
RUN (RUNNING) TRH (TRIP HEALTHY) FWD_POS (FORWARD POSITION FEEDBACK) REV_POS (REVERSE POSITION FEEDBACK)

000 – DENOTES 3 DIGIT EQUIPMENT NUMBER

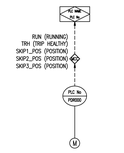

NOTE 6

POSITIONING DRIVE
SIGNALS
DI
RUN (RUNNING) TRH (TRIP HEALTHY) SKIP1_POS (POSITION FEEDBACK) SKIP2_POS (POSITION FEEDBACK) SKIP3_POS (POSITION FEEDBACK)

000 – DENOTES 3 DIGIT EQUIPMENT NUMBER

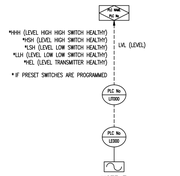

NOTE 7

ULTRASONIC LEVEL SENSOR	
SIGNALS	
DI	AI
HHH (LEVEL HIGH HIGH SWITCH HEALTHY) HSH (LEVEL HIGH SWITCH HEALTHY) LSH (LEVEL LOW SWITCH HEALTHY) LLH (LEVEL LOW LOW SWITCH HEALTHY) HEL (LEVEL TRANSMITTER HEALTHY)	LVL (LEVEL)

000 – DENOTES 3 DIGIT EQUIPMENT NUMBER

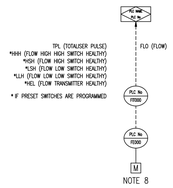

NOTE 8

FLOW SENSOR					
M MAG FLOW	ULTRASONIC (eg CLAMP-ON)	VENTURI	WEDGE	ORIFICE PLATE	FLUME
PITOUT TUBE	SIGNALS				
DI	AI				
TPL (TOTALISER PULSE) HHH (FLOW HIGH HIGH SWITCH HEALTHY) HSH (FLOW HIGH SWITCH HEALTHY) LSH (FLOW LOW SWITCH HEALTHY) LLH (FLOW LOW LOW SWITCH HEALTHY) HEL (FLOW TRANSMITTER HEALTHY)	FLO (FLOW)				

000 – DENOTES 3 DIGIT EQUIPMENT NUMBER

NOTE 9

PRESSURE SWITCH	
SIGNALS	
DI	AI
PSL (LOW PRESSURE SWITCH HEALTHY) PSH (HIGH PRESSURE SWITCH HEALTHY)	

000 – DENOTES 3 DIGIT EQUIPMENT NUMBER

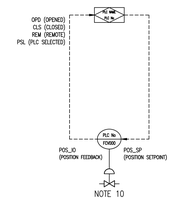

NOTE 10

MODULATING MOTORISED VALVE (FLOW CONTROL)		
SIGNALS		
DI	AI	AO
OPD (OPENED) CLS (CLOSED) REM (REMOTE) PSL (PLC SELECTED)	POS_IO (POSITION FEEDBACK)	POS_SP (POSITION SETPOINT)

000 – DENOTES 3 DIGIT EQUIPMENT NUMBER

NOTE 11

SOLENOID VALVE (SPRING-CLOSE) WITHOUT POSITION FEEDBACK
SIGNALS
DO
OPN (OPEN)

000 – DENOTES 3 DIGIT EQUIPMENT NUMBER

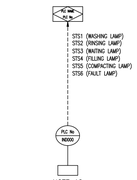

NOTE 12

WASHER/COMPACTOR STATUS INDICATION PANEL
SIGNALS
DO
STS1 (WASHING LAMP) STS2 (RINSING LAMP) STS3 (WAITING LAMP) STS4 (FILLING LAMP) STS5 (COMPACTING LAMP) STS6 (FAULT LAMP)

000 – DENOTES 3 DIGIT EQUIPMENT NUMBER

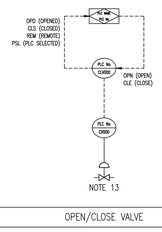

NOTE 13

OPEN/CLOSE VALVE
SIGNALS
DI	DO
OPD (OPENED) CLS (CLOSED) REM (REMOTE) PSL (PLC SELECTED)	OPN (OPEN) CLE (CLOSE)

000 – DENOTES 3 DIGIT EQUIPMENT NUMBER

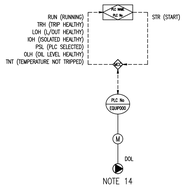

NOTE 14

COMPRESSOR DOL DRIVE	
SIGNALS	
DI	DO
RUN (RUNNING) TRH (TRIP HEALTHY) LOH (L/OUT HEALTHY) IOH (ISOLATED HEALTHY) PSL (PLC SELECTED) OLH (OIL LEVEL HEALTHY) TNT (TEMPERATURE NOT TRIPPED)	STR (START)

000 – DENOTES 3 DIGIT EQUIPMENT NUMBER

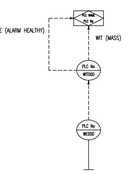

NOTE 15

LOAD CELL	
SIGNALS	
DI	AI
AHE (ALARM HEALTHY)	WIT (MASS)

000 – DENOTES 3 DIGIT EQUIPMENT NUMBER

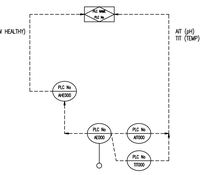

NOTE 16

pH PROBE	
SIGNALS	
DI	AI
AHE (ALARM HEALTHY)	AIT (pH) TIT (TEMP)

000 – DENOTES 3 DIGIT EQUIPMENT NUMBER

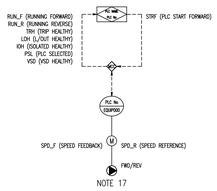

NOTE 17

TRASH SCREEN			
SIGNALS			
DI	DO	AI	AO
RUN_F (RUNNING FORWARD) RUN_R (RUNNING REVERSE) TRH (TRIP HEALTHY) LOH (L/OUT HEALTHY) IOH (ISOLATED HEALTHY) PSL (PLC SELECTED) VSD (VSD HEALTHY)	STRF (PLC START FORWARD)	SPD_F (SPEED FEEDBACK)	SPD_R (SPEED REFERENCE)

000 – DENOTES 3 DIGIT EQUIPMENT NUMBER

NOTE 18

PRESSURE TRANSMITTER	
SIGNALS	
AI	
PRS (PRESSURE)	

000 – DENOTES 3 DIGIT EQUIPMENT NUMBER

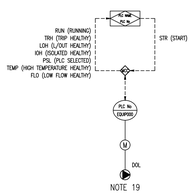

NOTE 19

DOL DRIVE	
SIGNALS	
DI	DO
RUN (RUNNING) TRH (TRIP HEALTHY) LOH (L/OUT HEALTHY) IOH (ISOLATED HEALTHY) PSL (PLC SELECTED) TEMP (HIGH TEMPERATURE HEALTHY) FLO (LOW FLOW HEALTHY)	STR (START)

000 – DENOTES 3 DIGIT EQUIPMENT NUMBER

DEPARTMENT	APPROVED	DESIGNATION	DATE

CONSULTING ENGINEERS

ZITHOLELE CONSULTING

ZITHOLELE
P.O. BOX 6002
HALFWAY HOUSE
1685
TEL: (011) 207 2060
FAX: (086) 674 6121
EMAIL: mail@zitholele.co.za

WSP Group Africa (Pty) Ltd
Industrial Division
Building C, Knightsbridge,
33 Sloane Street, Bryanston, 2191
Tel: +27 11 361 1300 Fax: +27 11 361 1431 www.wsp.com

SURVEYED	
DESIGNED	
DRAWN	M DYKE
CHECKED	W BRITZ
SERVICES CHECKED	
GEOTECHNICAL INVESTIGATION	
SERVITUDES	
APPROVED	
Pr. Eng. No.	
DATE	

JOHANNESBURG WATER (SOC) LTD

Johannesburg Water

17 HARRISON STREET
MARSHALLTOWN
2107

TEL: (011) 688-1400
FAX: (011) 688-1529

CITY OF JOHANNESBURG

BUSHKOPPIE WASTEWATER TREATMENT WORKS

INFRASTRUCTURE RENEWAL PLAN
HOW
PROCESS AND INSTRUMENTATION
LEGEND SHEET

DESIGN MANAGER

DATE

SCALE

NTS

AMENDMENTS		APPROVED	DATE
T0	FOR TENDER	WB	16.08.21
T1	RE-ISSUED FOR TENDER	CdT	07.01.25

DRAWING No.

JW NUMBER

CONSULTANT'S NUMBER
CI–PID00

FILE No

T0 T1

Z:\461000sv\46100563 – Bushkoppie WWTW HOW\51 01\02-CADD\01-Current\03-Drawings\PIdDs\46100563-WSP-DR-CI-PID00_T1.dwg Jan 07, 2025 – 2:35pm

46100563–WSP–DR–CI–PID00_T1.dwg

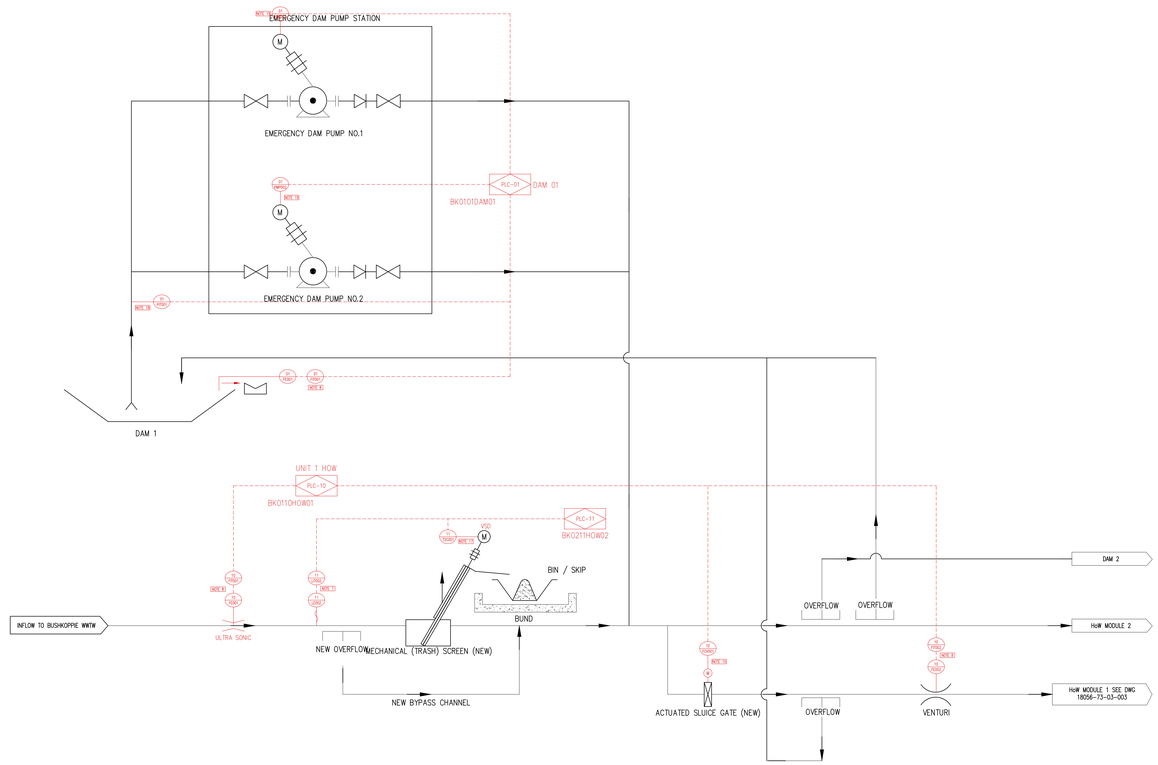

DEPARTMENT	APPROVED	DESIGNATION	DATE

CONSULTING ENGINEERS

ZITHOLELE CONSULTING

ZITHOLELE
P.O. BOX 6002
HALFWAY HOUSE
1685
TEL: (011) 207 2060
FAX: (086) 674 6121
EMAIL: mail@zitholele.co.za

WSP Group Africa (Pty) Ltd
Industrial Division
Building C, Knightsbridge,
33 Sloane Street, Bryanston, 2191
Tel: +27 11 361 1300 Fax: +27 11 361 1431 www.wsp.com

SURVEYED	
DESIGNED	
DRAWN	M DYKE
CHECKED	W BRITZ
SERVICES CHECKED	
GEOTECHNICAL INVESTIGATION	
SERVITUDES	
APPROVED	
Pr. Eng. No.	
DATE	

JOHANNESBURG WATER (SOC) LTD

Johannesburg Water

17 HARRISON STREET
MARSHALLTOWN
2107

TEL: (011) 688-1400

FAX: (011) 688-1529

CITY OF JOHANNESBURG

BUSHKOPPIE WASTEWATER TREATMENT WORKS

INFRASTRUCTURE RENEWAL PLAN

HOW

INFLOW TO MODULE 1 AND MODULE 2

PROCESS AND INSTRUMENTATION DIAGRAM

DESIGN MANAGER

DATE

SCALE

NTS

AMENDMENTS		APPROVED	DATE
T0	FOR TENDER	WB	16.08.21
T1	RE-ISSUED FOR TENDER	CdT	07.01.25

DRAWING No.

JW NUMBER

CONSULTANT'S NUMBER
CI-PID01

FILE No

T0 T1

Z:\461000xx\46100563 - Bushkoppie WWTW HOW\51 0\02-CADD\01-Current\03-Drawings\P&IDs\46100563-WSP-DR-CI-PID01_T1.dwg Jan 07, 2025 - 2:34pm

46100563-WSP-DR-CI-PID01_T1.dwg

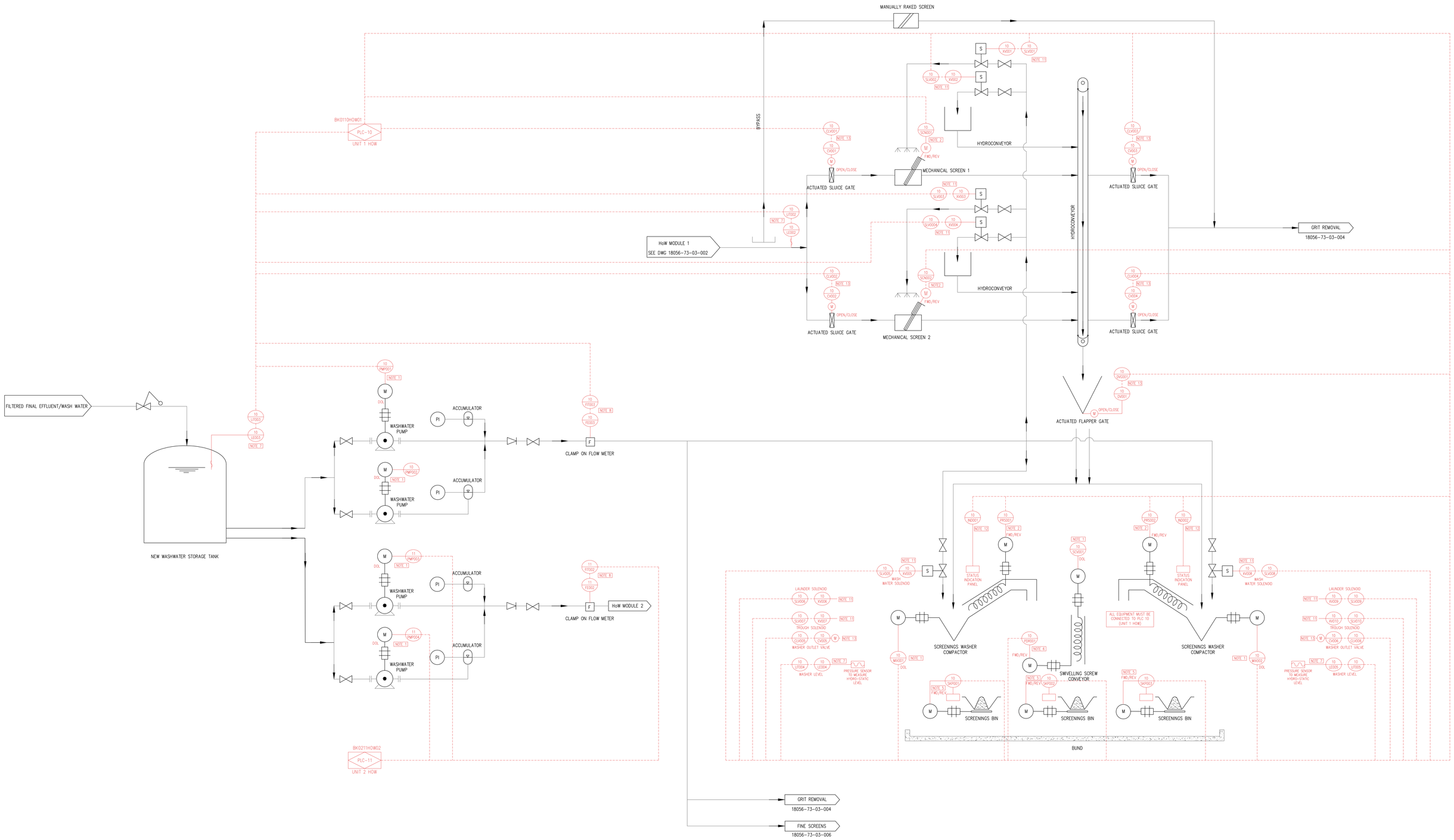

DEPARTMENT	APPROVED	DESIGNATION	DATE

CONSULTING ENGINEERS

ZITHOLELE CONSULTING

ZITHOLELE
P.O. BOX 6002
HALFWAY HOUSE
1685
TEL: (011) 207 2060
FAX: (086) 674 6121
EMAIL: mail@zitholele.co.za

WSP Group Africa (Pty) Ltd
Industrial Division
Building C, Knightsbridge,
33 Sloane Street, Bryanston, 2191
Tel: +27 11 361 1300 Fax: +27 11 361 1431 www.wsp.com

SURVEYED	
DESIGNED	
DRAWN	M DYKE
CHECKED	W BRITZ
SERVICES CHECKED	
GEOTECHNICAL INVESTIGATION	
SERVITUDES	
APPROVED	
Pr. Eng. No.	
DATE	

JOHANNESBURG WATER (SOC) LTD

Johannesburg Water

17 HARRISON STREET
MARSHALLTOWN
2107

TEL: (011) 688-1400
FAX: (011) 688-1529

CITY OF JOHANNESBURG

BUSHKOPPIE WASTEWATER TREATMENT WORKS

INFRASTRUCTURE RENEWAL PLAN
HOW
MODULE 1 – COARSE SCREENS
PROCESS AND INSTRUMENTATION DIAGRAM

DESIGN MANAGER

DATE

SCALE: NTS

AMENDMENTS		APPROVED	DATE
T0	FOR TENDER	WB	16.08.21
T1	RE-ISSUED FOR TENDER 07.01.25		

DRAWING No.

JW NUMBER

CONSULTANT'S NUMBER
CI-PID02

FILE No

TO T1

Z:\461000xx\46100563 – Bushkoppie WWTW HOW\51 07\02-CADD\01-Current\03-Drawings\PIdDs\46100563-WSP-DR-CI-PID02_T1.dwg Jan 07, 2025 – 2:33pm

46100563-WSP-DR-CI-PID02_T1.dwg

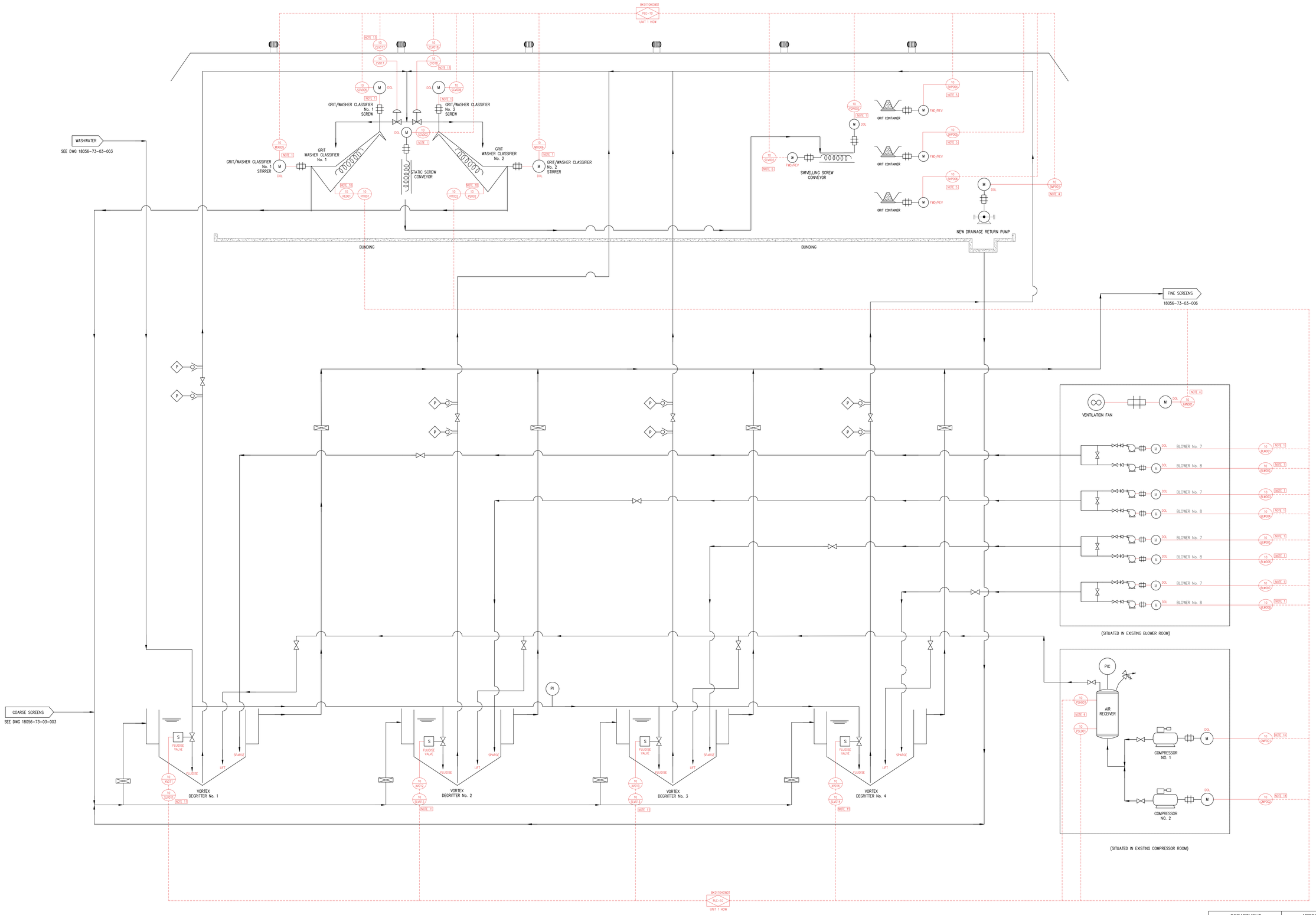

DEPARTMENT	APPROVED	DESIGNATION	DATE

CONSULTING ENGINEERS

ZITHOLELE CONSULTING

ZITHOLELE
P.O. BOX 6002
HALFWAY HOUSE
1685
TEL: (011) 207 2060
FAX: (086) 674 6121
EMAIL: mail@zitholele.co.za

WSP Group Africa (Pty) Ltd
Industrial Division
Building C, Knightsbridge,
33 Sloane Street, Bryanston, 2191
Tel: +27 11 361 1300 Fax: +27 11 361 1431 www.wsp.com

SURVEYED	
DESIGNED	
DRAWN	M DYKE
CHECKED	W BRITZ
SERVICES CHECKED	
GEOTECHNICAL INVESTIGATION	
SERVITUDES	
APPROVED	
Pr. Eng. No.	
DATE	

JOHANNESBURG WATER (SOC) LTD

Johannesburg Water

17 HARRISON STREET
MARSHALLTOWN
2107

TEL: (011) 688-1400
FAX: (011) 688-1529

CITY OF JOHANNESBURG

BUSHKOPPIE WASTEWATER TREATMENT WORKS

INFRASTRUCTURE RENEWAL PLAN

HOW

MODULE 1 – PRELIMINARY TREATMENT: GRIT REMOVAL

PROCESS AND INSTRUMENTATION DIAGRAM

DESIGN MANAGER

DATE

SCALE: NTS

AMENDMENTS		APPROVED	DATE
T0	FOR TENDER	WB	16.08.21
T1	RE-ISSUED FOR TENDER	CdT	07.01.25

DRAWING No.

JW NUMBER

CONSULTANT'S NUMBER: CI-PID03

FILE No

T0 T1

Z:\461000xx\46100563 – Bushkoppie WWTW HOW\51 OT\02-CADD\01-Current\03-Drawings\PIdDs\46100563-WSP-DR-CI-PID03_T1.dwg Jan 07, 2025 – 2:32pm

46100563-WSP-DR-CI-PID03_T1.dwg

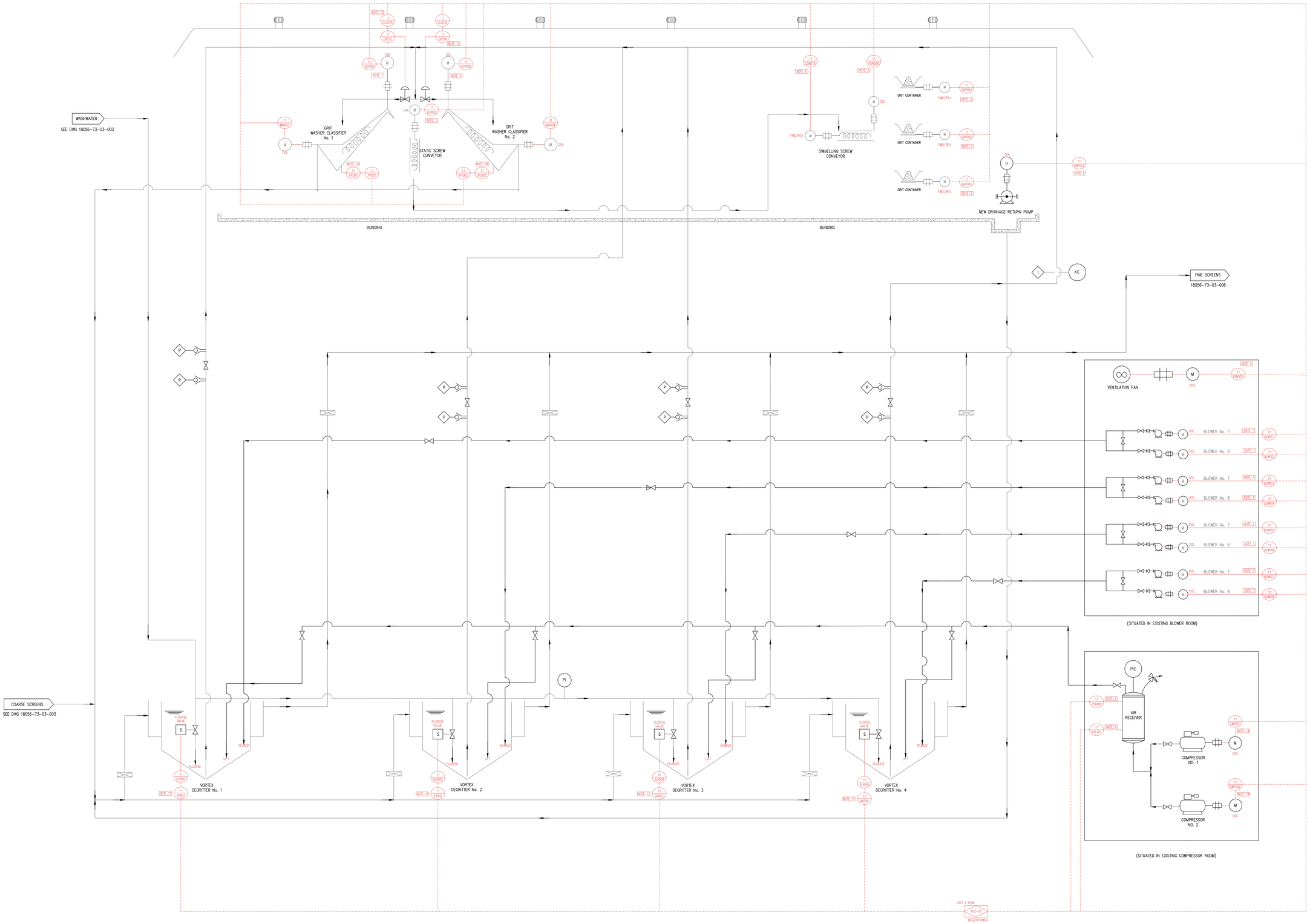

DEPARTMENT	APPROVED	DESIGNATION	DATE

CONSULTING ENGINEERS

ZITHOLELE CONSULTING

ZITHOLELE
P.O. BOX 6002
HALFWAY HOUSE
1685
TEL: (011) 207 2060
FAX: (086) 674 6121
EMAIL: mail@zitholele.co.za

WSP Group Africa (Pty) Ltd
Industrial Division
Building C, Knightsbridge,
33 Sloane Street, Bryanston, 2191
Tel: +27 11 361 1300 Fax: +27 11 361 1431 www.wsp.com

SURVEYED	
DESIGNED	
DRAWN	M DYKE
CHECKED	W BRITZ
SERVICES CHECKED	
GEOTECHNICAL INVESTIGATION	
SERVITUDES	
APPROVED	
Pr. Eng. No.	
DATE	

JOHANNESBURG WATER (SOC) LTD

Johannesburg Water

17 HARRISON STREET
MARSHALLTOWN
2107

TEL: (011) 688-1400
FAX: (011) 688-1529

CITY OF JOHANNESBURG

BUSHKOPPIE WASTEWATER TREATMENT WORKS

INFRASTRUCTURE RENEWAL PLAN

HOW

MODULE 2 – PRELIMINARY TREATMENT: GRIT REMOVAL

PROCESS AND INSTRUMENTATION DIAGRAM

DESIGN MANAGER

DATE

SCALE: NTS

AMENDMENTS		APPROVED	DATE
T0	FOR TENDER	WB	16.08.21
T1	RE-ISSUED FOR TENDER	CdT	07.01.25

DRAWING No.

JW NUMBER

CONSULTANT'S NUMBER
CI-PID04

FILE No

T0 T1

Z:\461000xx\46100563 – Bushkoppie WWTW HOW\51 CT\02-CADD\01-Current\03-Drawings\P&IDs\46100563-WSP-DR-CI-PID04_T1.dwg Jan 07, 2025 – 2:31pm

46100563-WSP-DR-CI-PID04_T1.dwg

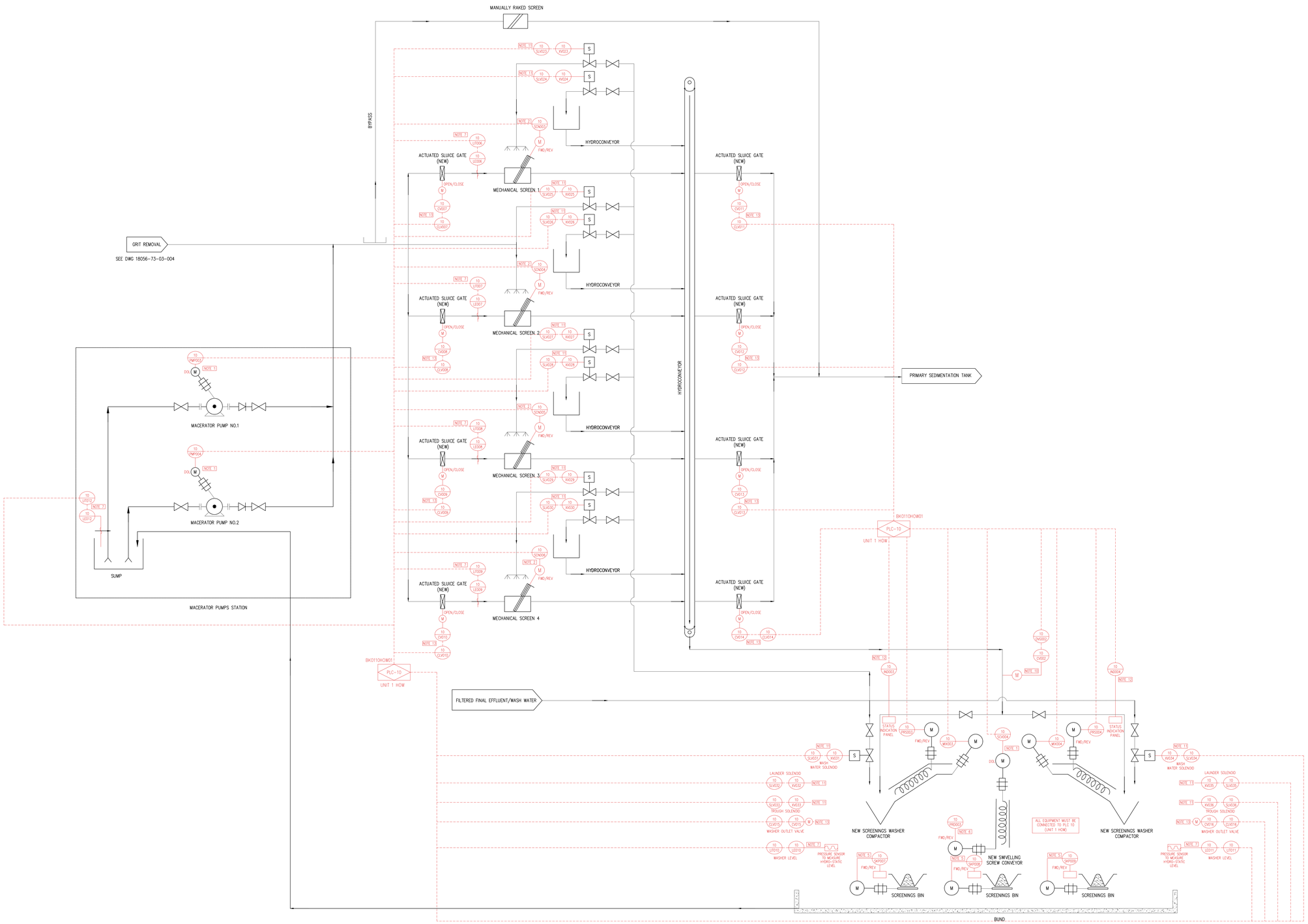

DEPARTMENT	APPROVED	DESIGNATION	DATE

CONSULTING ENGINEERS

ZITHOLELE CONSULTING

ZITHOLELE
P.O. BOX 6002
HALFWAY HOUSE
1685
TEL: (011) 207 2060
FAX: (086) 674 6121
EMAIL: mail@zitholele.co.za

WSP Group Africa (Pty) Ltd
Industrial Division
Building C, Knightsbridge,
33 Sloane Street, Bryanston, 2191
Tel: +27 11 361 1300 Fax: +27 11 361 1431 www.wsp.com

SURVEYED	
DESIGNED	
DRAWN	M DYKE
CHECKED	W BRITZ
SERVICES CHECKED	
GEOTECHNICAL INVESTIGATION	
SERVITUDES	
APPROVED	
Pr. Eng. No.	
DATE	

JOHANNESBURG WATER (SOC) LTD

Johannesburg Water

17 HARRISON STREET
MARSHALLTOWN
2107

TEL: (011) 688-1400
FAX: (011) 688-1529

CITY OF JOHANNESBURG

BUSHKOPPIE WASTEWATER TREATMENT WORKS
INFRASTRUCTURE RENEWAL PLAN
HOW
MODULE 1 – FINE SCREENS
PROCESS AND INSTRUMENTATION DIAGRAM

DESIGN MANAGER

DATE

SCALE: NTS

AMENDMENTS		APPROVED	DATE
T0	FOR TENDER	WB	16.08.21
T1	RE-ISSUED FOR TENDER	CdT	07.11.25

DRAWING No.
JW NUMBER
CONSULTANT'S NUMBER CI-PID05
FILE No
T0 T1

Z:\461000xx\46100563 – Bushkoppie WWTW HOW\51 CI\02-CADD\01-Current\03-Drawings\PIdDs\46100563-WSP-DR-CI-PID05_T1.dwg Jan 07, 2025 – 2:30pm

46100563-WSP-DR-CI-PID05_T1.dwg

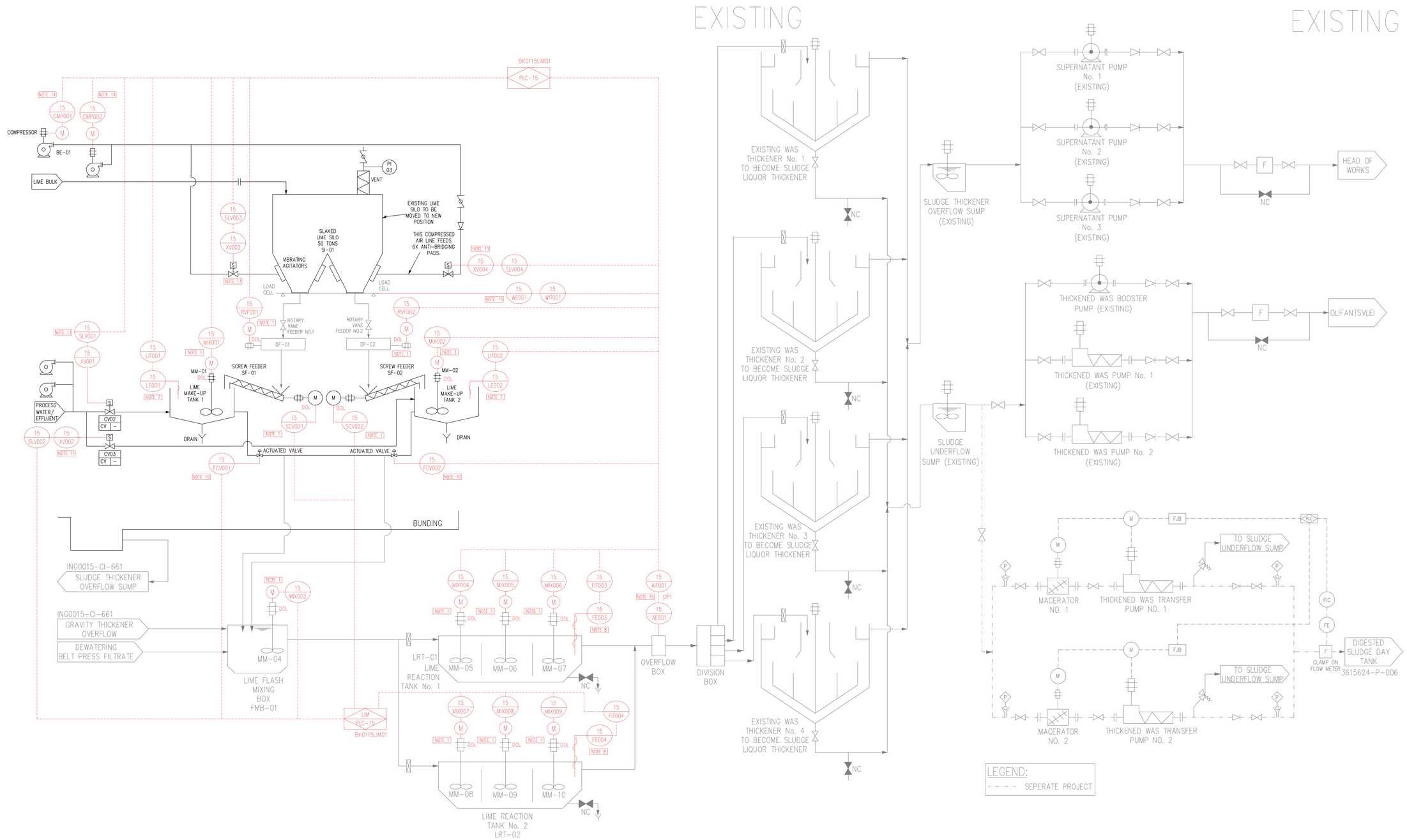

DEPARTMENT	APPROVED	DESIGNATION	DATE

CONSULTING ENGINEERS

ZITHOLELE CONSULTING

ZITHOLELE
P.O. BOX 6002
HALFWAY HOUSE
1685
TEL: (011) 207 2060
FAX: (086) 674 6121
EMAIL: mail@zitholele.co.za

WSP Group Africa (Pty) Ltd
Industrial Division
Building C, Knightsbridge,
33 Sloane Street, Bryanston, 2191
Tel: +27 11 361 1300 Fax: +27 11 361 1431 www.wsp.com

SURVEYED	
DESIGNED	
DRAWN	M DYKE
CHECKED	W BRITZ
SERVICES CHECKED	
GEOTECHNICAL INVESTIGATION	
SERVITUDES	
APPROVED	
Pr. Eng. No.	
DATE	

JOHANNESBURG WATER (SOC) LTD

Johannesburg Water

17 HARRISON STREET
MARSHALLTOWN
2107

TEL: (011) 688-1400
FAX: (011) 688-1529

CITY OF JOHANNESBURG

BUSHKOPPIE WASTEWATER TREATMENT WORKS

INFRASTRUCTURE RENEWAL PLAN

LIME DOSING PLANT

PROCESS AND INSTRUMENTATION DIAGRAM

DESIGN MANAGER

DATE

SCALE

NTS

AMENDMENTS		APPROVED	DATE
T0	FOR TENDER	WB	16.08.21
T1	RE-ISSUED FOR TENDER	CdT	07.01.25

DRAWING No.

JW NUMBER

CONSULTANT'S NUMBER
CI-PID06

FILE No

T0 T1

46100563-WSP-DR-CI-PID06_T1.dwg

Z:\461000xx\46100563 – Bushkoppie WWTW HOW\51 CT\02-CADD\01-Current\03-Drawings\FBdDs\46100563-WSP-DR-CI-PID06_T1.dwg Jan 07, 2025 – 2:21pm

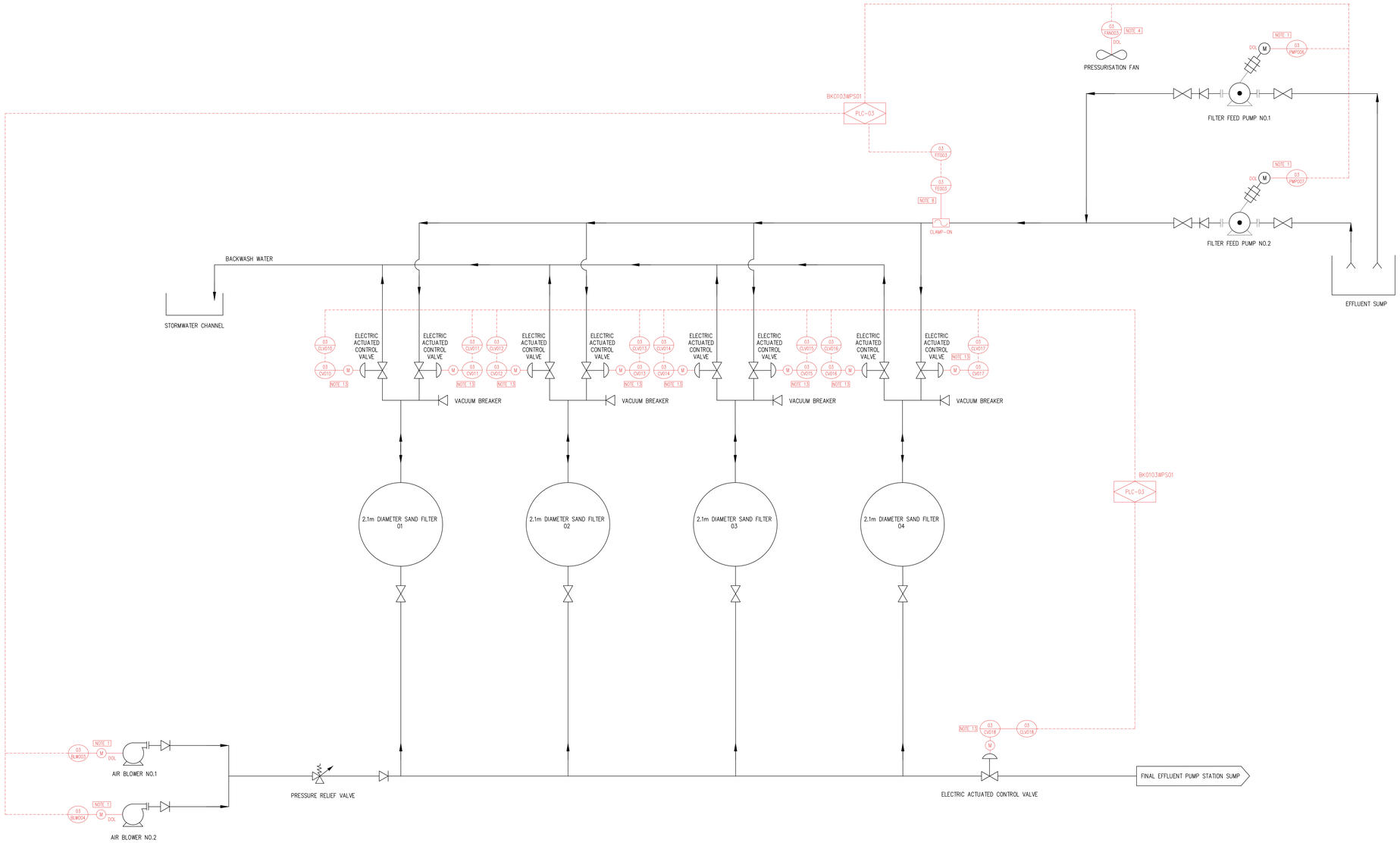

DEPARTMENT	APPROVED	DESIGNATION	DATE

CONSULTING ENGINEERS

ZITHOLELE CONSULTING

ZITHOLELE
P.O. BOX 6002
HALFWAY HOUSE
1685
TEL: (011) 207 2060
FAX: (086) 674 5121
EMAIL: mail@zitholele.co.za

WSP Group Africa (Pty) Ltd
Industrial Division
Building C, Knightsbridge,
33 Sloane Street, Bryanston, 2191
Tel: +27 11 361 1300 Fax: +27 11 361 1431 www.wsp.com

SURVEYED	
DESIGNED	
DRAWN	M DYKE
CHECKED	W BRITZ
SERVICES CHECKED	
GEOTECHNICAL INVESTIGATION	
SERVITUDES	
APPROVED	
Pr. Eng. No.	
DATE	

JOHANNESBURG WATER (SOC) LTD

Johannesburg Water

17 HARRISON STREET
MARSHALLTOWN
2107

TEL: (011) 688-1400
FAX: (011) 688-1529

CITY OF JOHANNESBURG

BUSHKOPPIE WASTEWATER TREATMENT WORKS
INFRASTRUCTURE RENEWAL PLAN
NEW WASH WATER FILTER
PUMP STATION
PROCESS AND INSTRUMENTATION DIAGRAM

DESIGN MANAGER

DATE

SCALE
NTS

AMENDMENTS		APPROVED	DATE
T0	FOR TENDER	WB	16.08.21
T1	RE-ISSUED FOR TENDER	CdT	07.01.25

DRAWING No.
JW NUMBER
CONSULTANT'S NUMBER
CI-PID07
FILE No
T0 T1

Z:\461000xx\46100563 – Bushkoppie WWTW HOW\51 OT\02-CADD\01-Current\03-Drawings\PI&Ds\46100563-WSP-DR-CI-PID07_T1.dwg Jan 07, 2025 – 2:09pm

46100563-WSP-DR-CI-PID07_T1.dwg

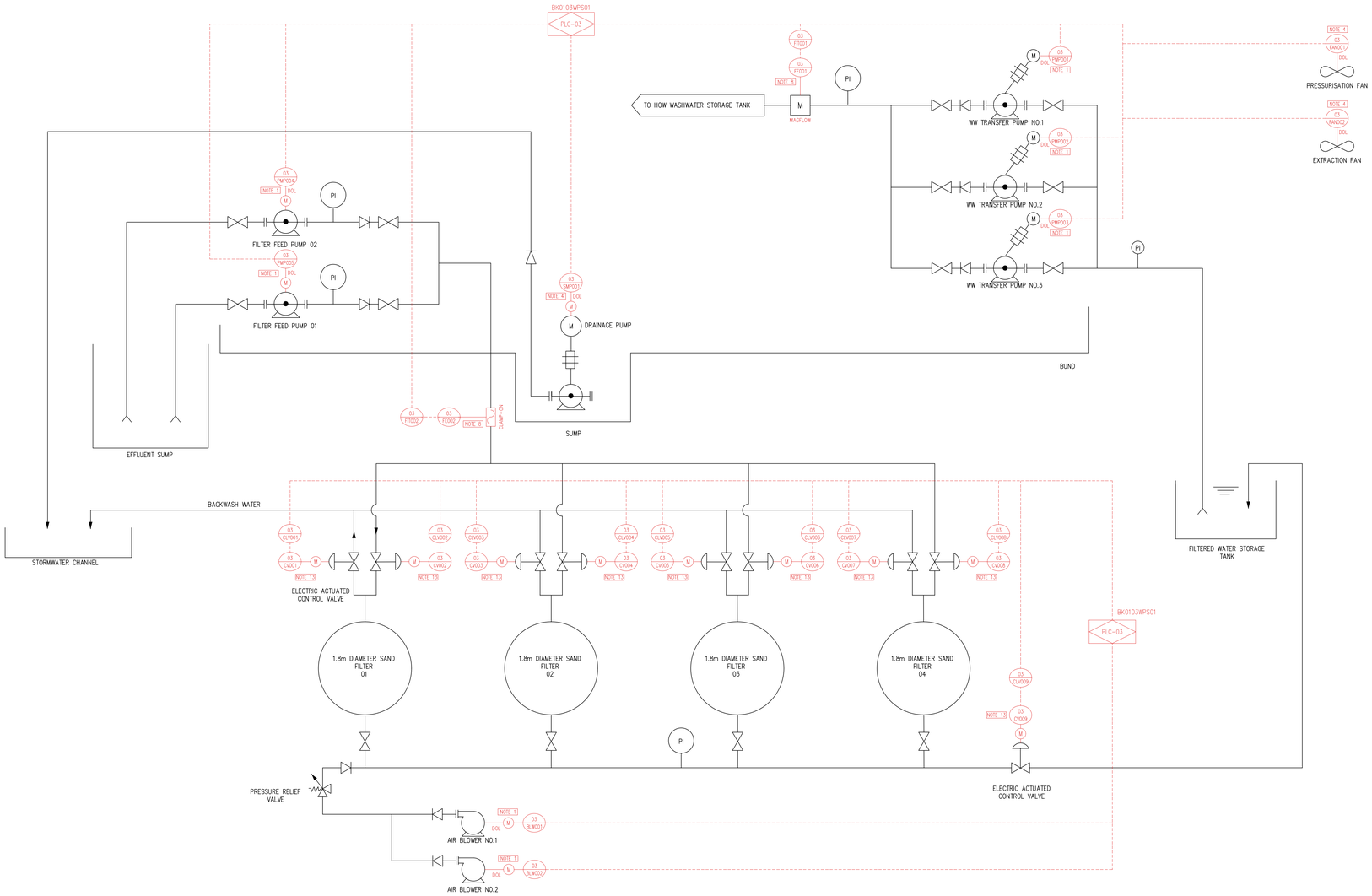

DEPARTMENT	APPROVED	DESIGNATION	DATE

CONSULTING ENGINEERS

ZITHOLELE CONSULTING

ZITHOLELE
P.O. BOX 6002
HALFWAY HOUSE
1685
TEL: (011) 207 2060
FAX: (086) 674 6121
EMAIL: mail@zitholele.co.za

WSP Group Africa (Pty) Ltd
Industrial Division
Building C, Knightsbridge,
33 Sloane Street, Bryanston, 2191
Tel: +27 11 361 1300 Fax: +27 11 361 1431 www.wsp.com

SURVEYED	
DESIGNED	
DRAWN	M DYKE
CHECKED	W BRITZ
SERVICES CHECKED	
GEOTECHNICAL INVESTIGATION	
SERVITUDES	
APPROVED	
Pr. Eng. No.	
DATE	

JOHANNESBURG WATER (SOC) LTD

Johannesburg Water

17 HARRISON STREET
MARSHALLTOWN
2107

TEL: (011) 688-1400
FAX: (011) 688-1529

CITY OF JOHANNESBURG

BUSHKOPPIE WASTEWATER TREATMENT WORKS
INFRASTRUCTURE RENEWAL PLAN
EXISTING WASH WATER
PUMP STATION
PROCESS AND INSTRUMENTATION DIAGRAM

DESIGN MANAGER

DATE

SCALE
NTS

AMENDMENTS		APPROVED	DATE
T0	FOR TENDER	WB	16.08.21
T1	RE-ISSUED FOR TENDER	CdT	07.01.25

DRAWING No.
JW NUMBER
CONSULTANT'S NUMBER CI-PID08
FILE No
T0 T1

46100563-WSP-DR-CI-PID08_T1.dwg

Z:\461000xx\46100563 - Bushkoppie WWTW HOW\51 CT\02-CADD\01-Current\03-Drawings\PIdDs\46100563-WSP-DR-CI-PID08_T1.dwg Jan 07, 2025 - 2:37pm

NOTES:

1. EARTH CORE MUST BE YELLOW/GREEN OR IT MUST BE FITTED WITH A YELLOW/GREEN SLEEVE.
2. SUBBASE 1: ABE-7S16E2M0: 230V AC DIGITAL INPUT
3. SUBBASE 2: ABE-7CPA02: 8ch ANALOG INPUT
4. SUBBASE 3: ABE-7R16S210: RELAY OUTPUT
5. SUBBASE 4: ABE-7CPA21: 4ch ANALOG OUTPUT
6. SPD 1: DEHNguard DG M TN 275
7. SPD 2: DEHNguard DG S 275 VA
8. SPD 3: BLITZDUCTOR BXT ML4 BD 24 + BASE BXT BAS
9. SPD 4: BLITZDUCTOR BXT ML2 BD S 24 + BASE BXT BAS
10. SPD 5: BLITZDUCTOR BXT ML4 BE 24 + BASE BXT BAS
11. SPD 6: BLITZDUCTOR BXT ML2 BE S 24 + BASE BXT BAS

* FUSED TERMINAL (500mA)

LINK TERMINAL

CONNECTION EXAMPLES

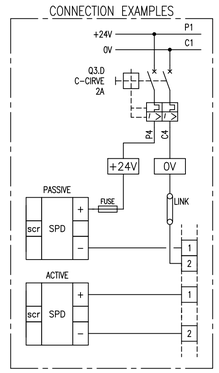

DEPARTMENT	APPROVED	DESIGNATION	DATE

CONSULTING ENGINEERS

Knight Piésold CONSULTING
P.O. BOX 221
RIVONIA
2128
TEL. 011-806 7111
FAX. 011-806 7100
EMAIL enquiries@kprsa.co.za

WSP Group Africa (Pty) Ltd
Industrial Division
Building C, Knightsbridge,
33 Sloane Street, Bryanston, 2191
Tel: +27 11 361 1300 Fax: +27 11 361 1431 www.wsp.com

SURVEYED	
DESIGNED	W BRITZ
DRAWN	M DYKE
CHECKED	W BRITZ
SERVICES CHECKED	
GEOTECHNICAL INVESTIGATION	
SERVITUDES	
APPROVED	
Pr. Eng. No.	
DATE	

JOHANNESBURG WATER SOC LTD

Johannesburg Water

17 HARRISON STREET
MARSHALLTOWN
2107

TEL: (011) 688-1400
FAX: (011) 688-1529

CITY OF JOHANNESBURG

BUSHKOPPIE WASTEWATER TREATMENT WORKS
INFRASTURCTURE RENEWAL PLAN
HEAD OF WORKS PLC-TYP REMOTE PANEL
ANALOG INPUT MODULE
DROP 1 / RACK 0 / SLOT 5

DESIGN MANAGER

DATE

SCALE

NTS

AMENDMENTS

		APPROVED	DATE
T0	ISSUED FOR TENDER	W BRITZ	08.08.19
T1	RE-ISSUED FOR TENDER	CdT	07.01.25

DRAWING No.

JW NUMBER

CONSULTANT'S NUMBER
TYP-D1R0S5-AI

FILE No

T0 T1

Z:\461000xx\461005563 - Bushkoppie WWTW HOW\51 CI\02-CADD\01-Current\03-Drawings\Typical Wiring\ING0645D-TYP-D1R0S5-AI revT1.dwg Jan 09, 2025 - 12:54pm

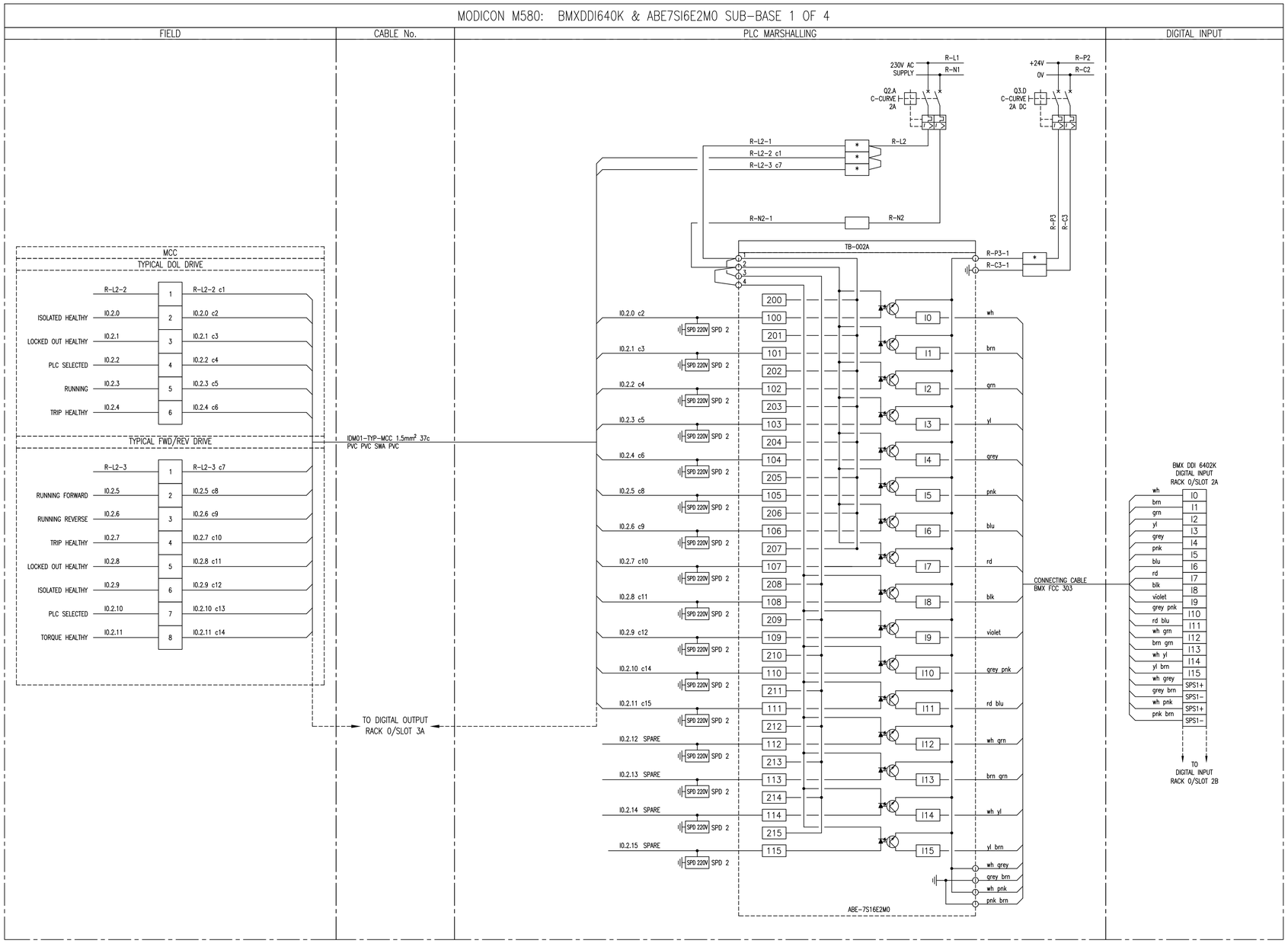

NOTES:

1. EARTH CORE MUST BE YELLOW/GREEN OR IT MUST BE FITTED WITH A YELLOW/GREEN SLEEVE.
2. SUB-BASE 1: ABE-7S16E2M0: 230V AC DIGITAL INPUT
3. SUB-BASE 2: ABE-7CPA02: 8ch ANALOG INPUT
4. SUB-BASE 3: ABE-7R16S210: RELAY OUTPUT
5. SUB-BASE 4: ABE-7CPA21: 4ch ANALOG OUTPUT
6. SPD 1: DEHNguard DG M TN 275
7. SPD 2: DEHNguard DG S 275 VA
8. SPD 3: BLITZDUCTOR BXT ML4 BD 24 + BASE BXT BAS
9. SPD 4: BLITZDUCTOR BXT ML2 BD S 24 + BASE BXT BAS
10. SPD 5: BLITZDUCTOR BXT ML4 BE 24 + BASE BXT BAS
11. SPD 6: BLITZDUCTOR BXT ML2 BE S 24 + BASE BXT BAS

* FUSED TERMINAL (500mA)

LINK TERMINAL

DEPARTMENT	APPROVED	DESIGNATION	DATE

CONSULTING ENGINEERS

Knight Piésold CONSULTING
P.O. BOX 221
RIVONIA
2128
TEL. 011-806 7111
FAX. 011-806 7100
EMAIL enquiries@kprsa.co.za

WSP Group Africa (Pty) Ltd
Industrial Division
Building C, Knightsbridge,
33 Sloane Street, Bryanston, 2191
Tel: +27 11 361 1300 Fax: +27 11 361 1431 www.wsp.com

SURVEYED	
DESIGNED	W BRITZ
DRAWN	M DYKE
CHECKED	W BRITZ
SERVICES CHECKED	
GEOTECHNICAL INVESTIGATION	
SERVITUDES	
APPROVED	
Pr. Eng. No.	
DATE	

JOHANNESBURG WATER SOC LTD

Johannesburg Water

17 HARRISON STREET
MARSHALLTOWN
2107

TEL: (011) 688-1400
FAX: (011) 688-1529

CITY OF JOHANNESBURG

BUSHKOPPIE WASTEWATER TREATMENT WORKS
INFRASTURCTURE RENEWAL PLAN
HEAD OF WORKS PLC-TYP
DIGITAL INPUT MODULE: SUB-BASE 1 OF 4
RACK 0 / SLOT 2A

DESIGN MANAGER

DATE

SCALE: NTS

AMENDMENTS

		APPROVED	DATE
T0	ISSUED FOR TENDER	W BRITZ	08.08.19
T1	RE-ISSUED FOR TENDER	CdT	07.01.25

DRAWING No.

JW NUMBER

CONSULTANT'S NUMBER: TYP-R0S2A-DI

FILE No

T0 T1

Z:\461000xx\46100563 - Bushkoppie WWTW HOW\51 CI\02-CADD\01-Current\03-Drawings\Typical Wiring\ING0645D-TYP-R0S2A-DI revT1.dwg Jan 09, 2025 - 12:53pm

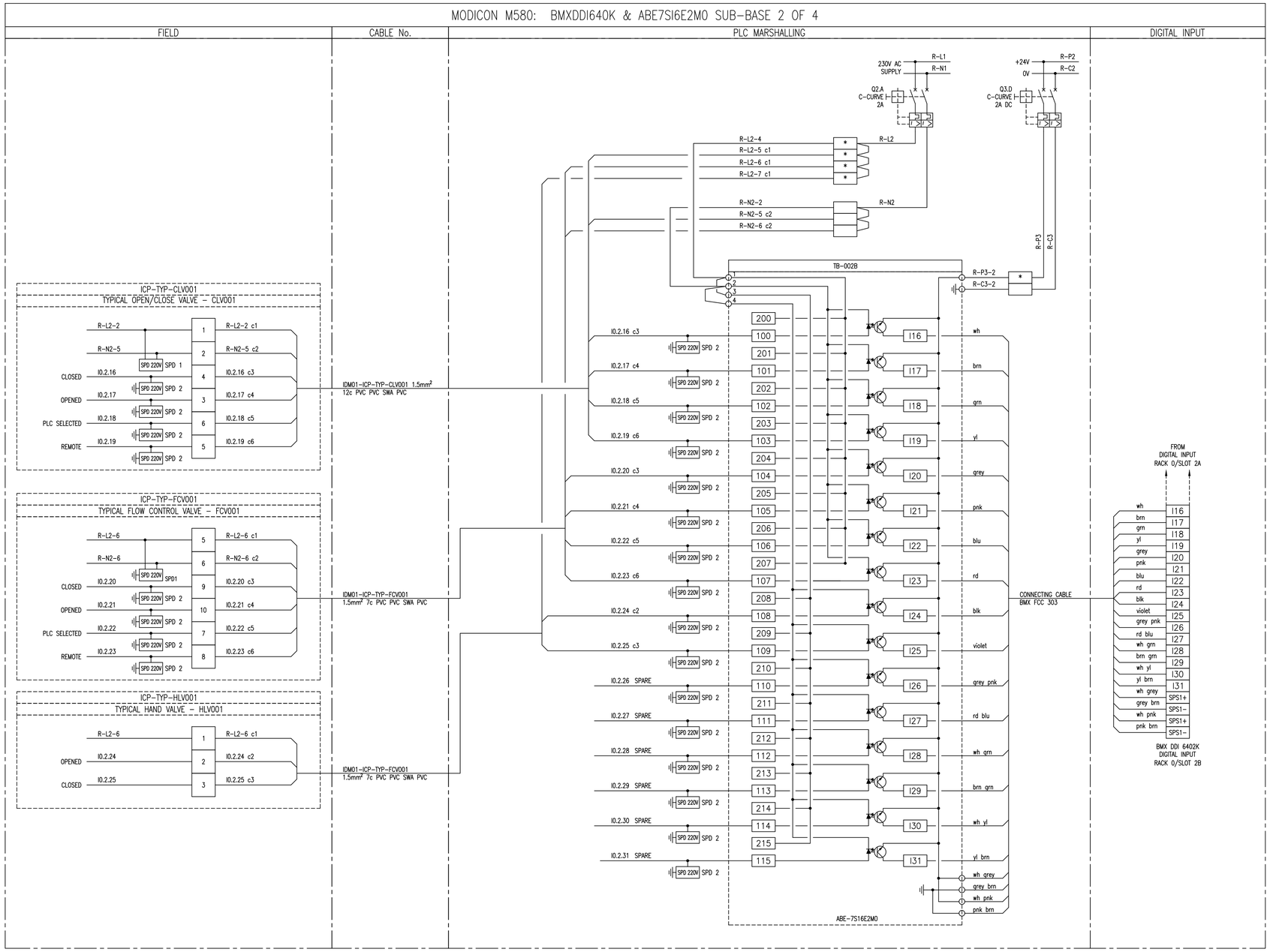

NOTES:

1. EARTH CORE MUST BE YELLOW/GREEN OR IT MUST BE FITTED WITH A YELLOW/GREEN SLEEVE.
2. SUB-BASE 1: ABE-7S16E2M0: 230V AC DIGITAL INPUT
3. SUB-BASE 2: ABE-7CPA02: 8ch ANALOG INPUT
4. SUB-BASE 3: ABE-7R16S210: RELAY OUTPUT
5. SUB-BASE 4: ABE-7CPA21: 4ch ANALOG OUTPUT
6. SPD 1: DEHNguard DG M TN 275
7. SPD 2: DEHNguard DG S 275 VA
8. SPD 3: BLITZDUCTOR BXT ML4 BD 24 + BASE BXT BAS
9. SPD 4: BLITZDUCTOR BXT ML2 BD S 24 + BASE BXT BAS
10. SPD 5: BLITZDUCTOR BXT ML4 BE 24 + BASE BXT BAS
11. SPD 2: BLITZDUCTOR BXT ML2 BE S 24 + BASE BXT BAS

* FUSED TERMINAL (500mA)

LINK TERMINAL

DEPARTMENT	APPROVED	DESIGNATION	DATE

CONSULTING ENGINEERS

Knight Piésold CONSULTING
P.O. BOX 221
RIVONIA
2128
TEL. 011-806 7111
FAX. 011-806 7100
EMAIL enquiries@kprsa.co.za

WSP Group Africa (Pty) Ltd
Industrial Division
Building C, Knightsbridge,
33 Sloane Street, Bryanston, 2191
Tel: +27 11 361 1300 Fax: +27 11 361 1431 www.wsp.com

SURVEYED	
DESIGNED	W BRITZ
DRAWN	M DYKE
CHECKED	W BRITZ
SERVICES CHECKED	
GEOTECHNICAL INVESTIGATION	
SERVITUDES	
APPROVED	
Pr. Eng. No.	
DATE	

JOHANNESBURG WATER SOC LTD

Johannesburg Water

17 HARRISON STREET
MARSHALLTOWN
2107

TEL: (011) 688-1400
FAX: (011) 688-1529

CITY OF JOHANNESBURG

BUSHKOPPIE WASTEWATER TREATMENT WORKS
INFRASTURCTURE RENEWAL PLAN
HEAD OF WORKS PLC-TYP
DIGITAL INPUT MODULE: SUB-BASE 2 OF 4
RACK 0 / SLOT 2B

DESIGN MANAGER

DATE

SCALE: NTS

AMENDMENTS

		APPROVED	DATE
T0	ISSUED FOR TENDER	W BRITZ	08.08.19
T1	RE-ISSUED FOR TENDER	CdT	07.01.25

DRAWING No.

JW NUMBER

CONSULTANT'S NUMBER
TYP-R0S2B-DI

FILE No

T0 T1

Z:\461000xx\46100563 - Bushkoppie WWTW HOW\51 C\02-CADD\01-Current\03-Drawings\Typical Wiring\ING0645D-TYP-R0S2B-DI revT1.dwg Jan 09, 2025 - 12:52pm

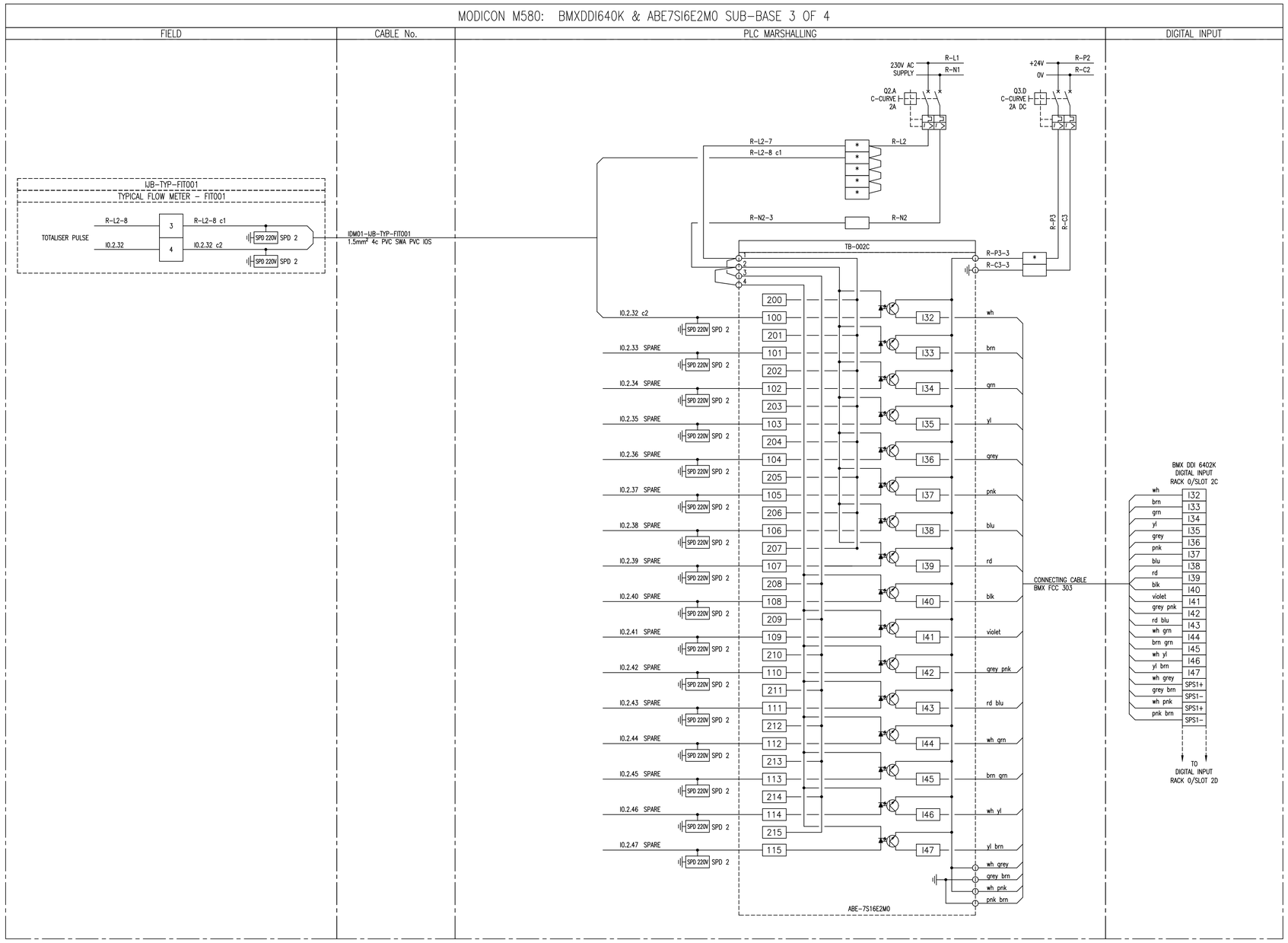

NOTES:

1. EARTH CORE MUST BE YELLOW/GREEN OR IT MUST BE FITTED WITH A YELLOW/GREEN SLEEVE.
2. SUB-BASE 1: ABE-7S16E2M0: 230V AC DIGITAL INPUT
3. SUB-BASE 2: ABE-7CPA02: 8ch ANALOG INPUT
4. SUB-BASE 3: ABE-7R16S210: RELAY OUTPUT
5. SUB-BASE 4: ABE-7CPA21: 4ch ANALOG OUTPUT
6. SPD 1: DEHNguard DG M TN 275
7. SPD 2: DEHNguard DG S 275 VA
8. SPD 3: BLITZDUCTOR BXT ML4 BD 24 + BASE BXT BAS
9. SPD 4: BLITZDUCTOR BXT ML2 BD S 24 + BASE BXT BAS
10. SPD 5: BLITZDUCTOR BXT ML4 BE 24 + BASE BXT BAS
11. SPD 2: BLITZDUCTOR BXT ML2 BE S 24 + BASE BXT BAS

* FUSED TERMINAL (500mA)

LINK TERMINAL

DEPARTMENT	APPROVED	DESIGNATION	DATE

CONSULTING ENGINEERS

Knight Piésold CONSULTING
P.O. BOX 221
RIVONIA
2128
TEL. 011-806 7111
FAX. 011-806 7100
EMAIL enquiries@kprsa.co.za

WSP Group Africa (Pty) Ltd
Industrial Division
Building C, Knightsbridge,
33 Sloane Street, Bryanston, 2191
Tel: +27 11 361 1300 Fax: +27 11 361 1431 www.wsp.com

SURVEYED	
DESIGNED	W BRITZ
DRAWN	M DYKE
CHECKED	W BRITZ
SERVICES CHECKED	
GEOTECHNICAL INVESTIGATION	
SERVITUDES	
APPROVED	
Pr. Eng. No.	
DATE	

JOHANNESBURG WATER SOC LTD

Johannesburg Water
17 HARRISON STREET
MARSHALLTOWN
2107
TEL: (011) 688-1400
FAX: (011) 688-1529

CITY OF JOHANNESBURG

BUSHKOPPIE WASTEWATER TREATMENT WORKS
INFRASTURCTURE RENEWAL PLAN
HEAD OF WORKS PLC-TYP
DIGITAL INPUT MODULE: SUB-BASE 3 OF 4
RACK 0 / SLOT 2C

DESIGN MANAGER

DATE

SCALE: NTS

AMENDMENTS

		APPROVED	DATE
T0	ISSUED FOR TENDER	W BRITZ	08.08.19
T1	RE-ISSUED FOR TENDER	CdT	07.01.25

DRAWING No.

JW NUMBER

CONSULTANT'S NUMBER
TYP-R0S2C-DI

FILE No

T0 T1

Z:\461000xx\461100563 - Bushkoppie WWTW HOW\51 CI\02-CADD\01-Current\03-Drawings\Typical Wiring\ING0645D-TYP-R0S2C-DI revT1.dwg Jan 09, 2025 - 12:50pm

MODICON M580: BMXDDI640K & ABE7SI6E2M0 SUB-BASE 4 OF 4

FIELD	CABLE No.	PLC MARSHALLING	DIGITAL INPUT

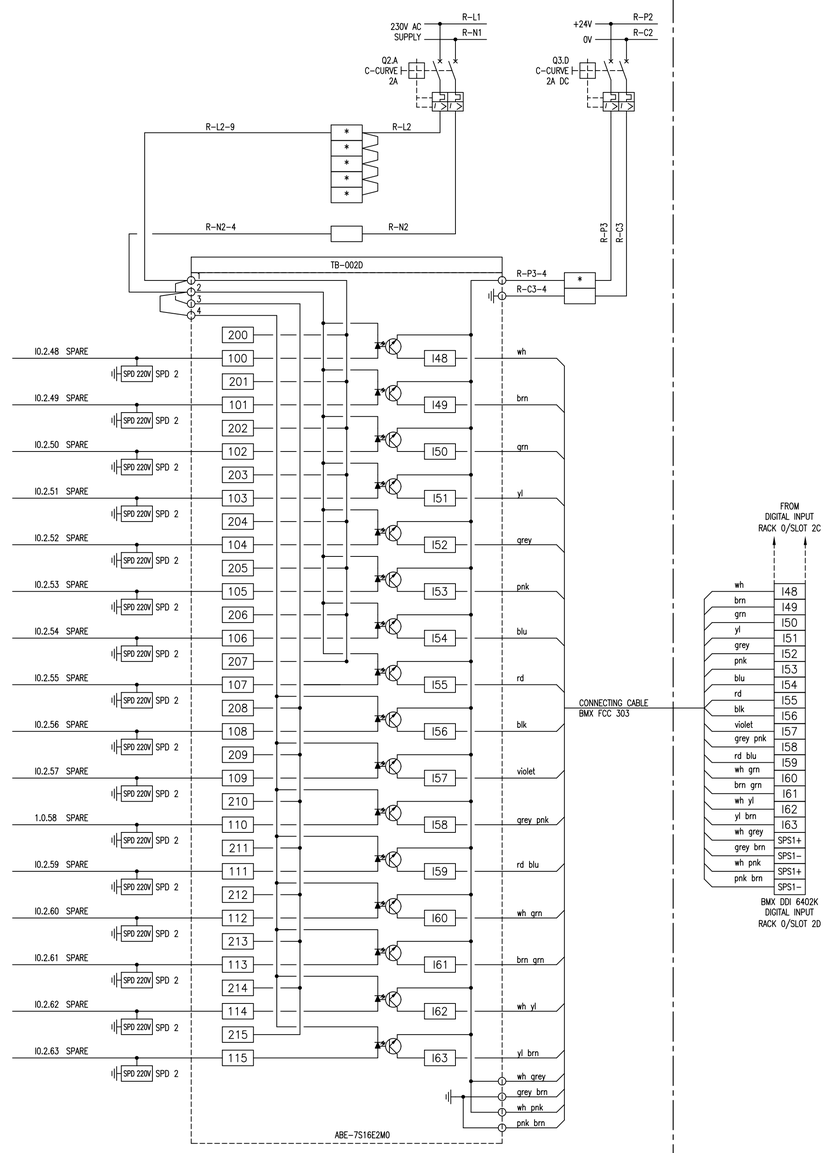

NOTES:

1. EARTH CORE MUST BE YELLOW/GREEN OR IT MUST BE FITTED WITH A YELLOW/GREEN SLEEVE.
2. SUB-BASE 1: ABE-7S16E2M0: 230V AC DIGITAL INPUT
3. SUB-BASE 2: ABE-7CPA02: 8ch ANALOG INPUT
4. SUB-BASE 3: ABE-7R16S210: RELAY OUTPUT
5. SUB-BASE 4: ABE-7CPA21: 4ch ANALOG OUTPUT
6. SPD 1: DEHNguard DG M TN 275
7. SPD 2: DEHNguard DG S 275 VA
8. SPD 3: BLITZDUCTOR BXT ML4 BD 24 + BASE BXT BAS
9. SPD 4: BLITZDUCTOR BXT ML2 BD S 24 + BASE BXT BAS
10. SPD 5: BLITZDUCTOR BXT ML4 BE 24 + BASE BXT BAS
11. SPD 2: BLITZDUCTOR BXT ML2 BE S 24 + BASE BXT BAS

* FUSED TERMINAL (500mA)

LINK TERMINAL

DEPARTMENT	APPROVED	DESIGNATION	DATE

CONSULTING ENGINEERS

Knight Piésold CONSULTING
P.O. BOX 221
RIVONIA
2128
TEL. 011-806 7111
FAX. 011-806 7100
EMAIL enquiries@kprsa.co.za

WSP Group Africa (Pty) Ltd
Industrial Division
Building C, Knightsbridge,
33 Sloane Street, Bryanston, 2191
Tel: +27 11 361 1300 Fax: +27 11 361 1431 www.wsp.com

SURVEYED	
DESIGNED	W BRITZ
DRAWN	M DYKE
CHECKED	W BRITZ
SERVICES CHECKED	
GEOTECHNICAL INVESTIGATION	
SERVITUDES	
APPROVED	
Pr. Eng. No.	
DATE	

JOHANNESBURG WATER SOC LTD

Johannesburg Water
17 HARRISON STREET
MARSHALLTOWN
2107
TEL: (011) 688-1400
FAX: (011) 688-1529

CITY OF JOHANNESBURG

BUSHKOPPIE WASTEWATER TREATMENT WORKS
INFRASTURCTURE RENEWAL PLAN
HEAD OF WORKS PLC-TYP
DIGITAL INPUT MODULE: SUB-BASE 4 OF 4
RACK 0 / SLOT 2D

DESIGN MANAGER

DATE

SCALE: NTS

AMENDMENTS		APPROVED	DATE
T0	ISSUED FOR TENDER	W BRITZ	08.08.19
T1	RE-ISSUED FOR TENDER	CdT	07.01.25

DRAWING No.

JW NUMBER

CONSULTANT'S NUMBER
TYP-R0S2D-DI

FILE No

T0 T1

Z:\461000xx\461100563 - Bushkoppie WWTW HOW\51 CI\02-CADD\01-Current\03-Drawings\Typical Wiring\ING0645D-TYP-R0S2D-DI revT1.dwg Jan 09, 2025 - 12:49pm

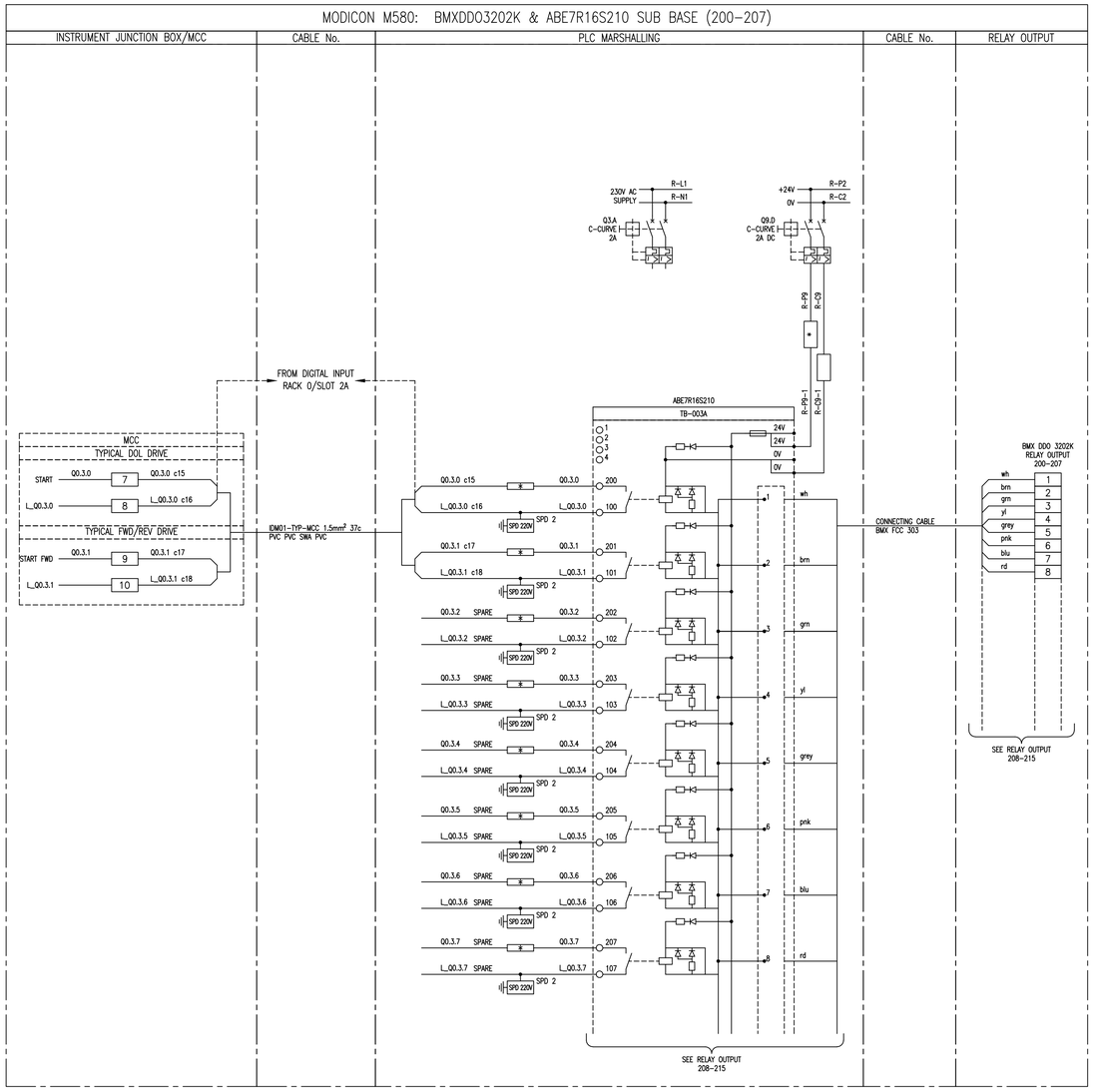

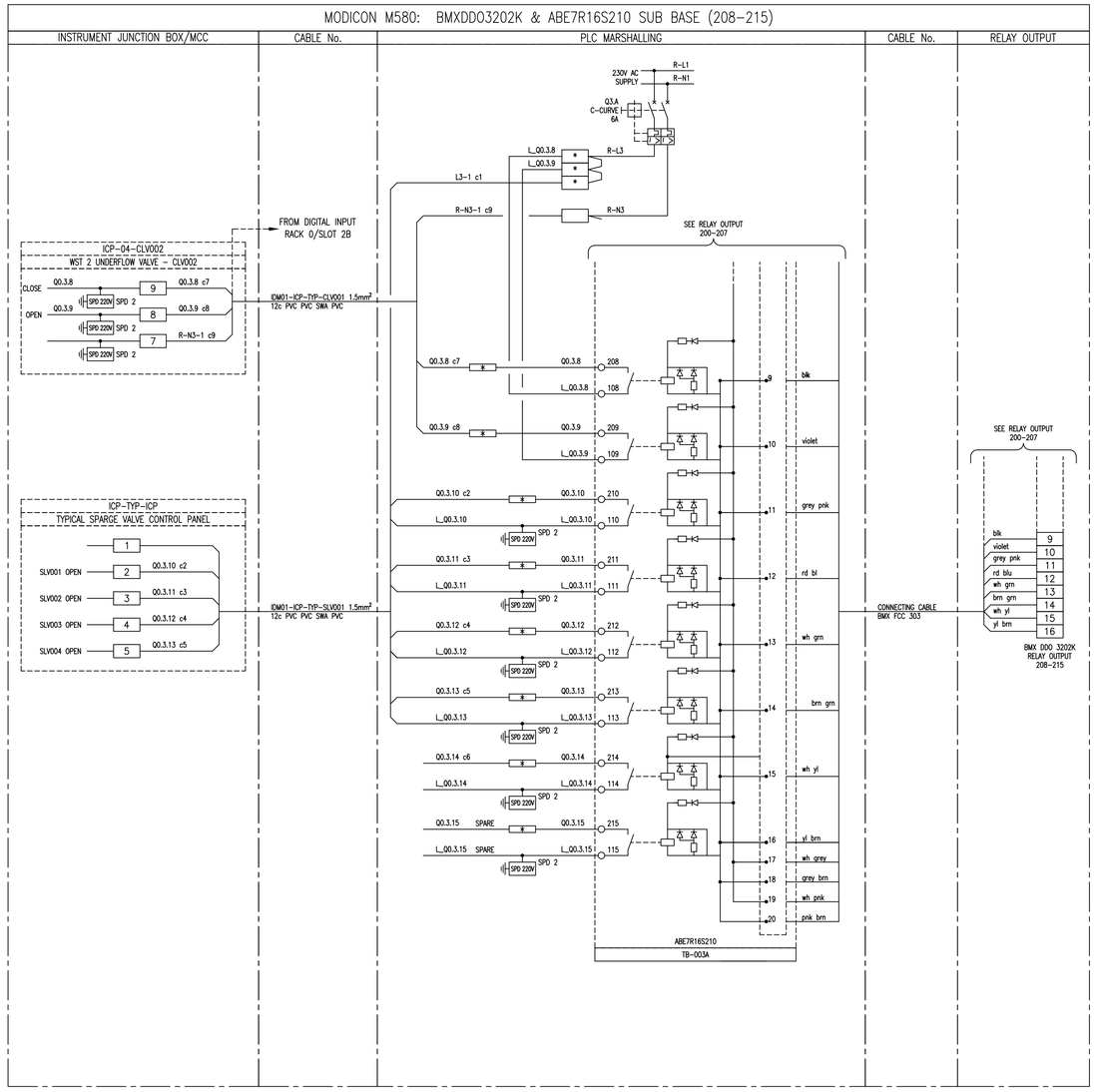

NOTES:

1. EARTH CORE MUST BE YELLOW/GREEN OR IT MUST BE FITTED WITH A YELLOW/GREEN SLEEVE.
2. SUB-BASE 1: ABE-7S16E2M0: 230V AC DIGITAL OUTPUT
3. SUB-BASE 2: ABE-7CPA02: 8ch ANALOG OUTPUT
4. SUB-BASE 3: ABE-7R16S210: RELAY OUTPUT
5. SUB-BASE 4: ABE-7CPA21: 4ch ANALOG OUTPUT
6. SPD 1: DEHNguard DG M TN 275
7. SPD 2: DEHNguard DG S 275 VA
8. SPD 3: BLITZDUCTOR BXT ML4 BD 24 + BASE BXT BAS
9. SPD 4: BLITZDUCTOR BXT ML2 BD S 24 + BASE BXT BAS
10. SPD 5: BLITZDUCTOR BXT ML4 BE 24 + BASE BXT BAS
11. SPD 6: BLITZDUCTOR BXT ML2 BE S 24 + BASE BXT BAS

* FUSED TERMINAL (500mA)
LINK TERMINAL

DEPARTMENT	APPROVED	DESIGNATION	DATE

CONSULTING ENGINEERS

Knight Piésold CONSULTING
P.O. BOX 221
RIVONIA
2128
TEL. 011-806 7111
FAX. 011-806 7100
EMAIL enquiries@kprsa.co.za

WSP Group Africa (Pty) Ltd
Industrial Division
Building C, Knightsbridge,
33 Sloane Street, Bryanston, 2191
Tel: +27 11 361 1300 Fax: +27 11 361 1431 www.wsp.com

SURVEYED	
DESIGNED	W BRITZ
DRAWN	M DYKE
CHECKED	W BRITZ
SERVICES CHECKED	
GEOTECHNICAL INVESTIGATION	
SERVITUDES	
APPROVED	
Pr. Eng. No.	
DATE	

JOHANNESBURG WATER SOC LTD

Johannesburg Water
17 HARRISON STREET
MARSHALLTOWN
2107
TEL: (011) 688-1400
FAX: (011) 688-1529

CITY OF JOHANNESBURG

BUSHKOPPIE WASTEWATER TREATMENT WORKS
INFRASTURCTURE RENEWAL PLAN
HEAD OF WORKS PLC-TYP
DIGITAL OUTPUT MODULE: SUB-BASE 1 OF 2
RACK 0 / SLOT 3A (200-215)

DESIGN MANAGER

DATE

SCALE: NTS

	AMENDMENTS	APPROVED	DATE
T0	ISSUED FOR TENDER	W BRITZ	08.08.19
T1	RE-ISSUED FOR TENDER	CdT	07.01.25

DRAWING No.

JW NUMBER

CONSULTANT'S NUMBER
TYP-R0S3A-DO

FILE No

T0 T1

Z:\461000xx\461100563 - Bushkoppie WWTW HOW\51 CI\02-CADD\01-Current\03-Drawings\Typical Wiring\ING0645D-TYP-R0S3A-DO revT1.dwg Jan 09, 2025 - 12:48pm

MODICON M580: BMXDDO3202K & ABE7R16S210 SUB BASE (216–223)

INSTRUMENT JUNCTION BOX/MCC	CABLE No.	PLC MARSHALLING	CABLE No.	RELAY OUTPUT

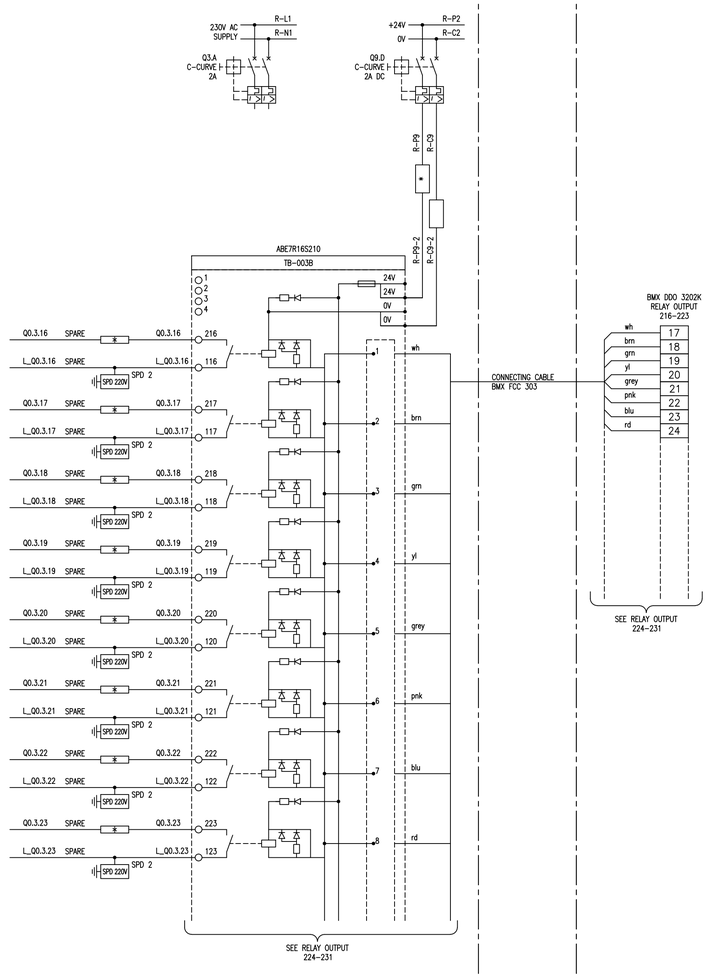

MODICON M580: BMXDDO3202K & ABE7R16S210 SUB BASE (224–231)

INSTRUMENT JUNCTION BOX/MCC	CABLE No.	PLC MARSHALLING	CABLE No.	RELAY OUTPUT

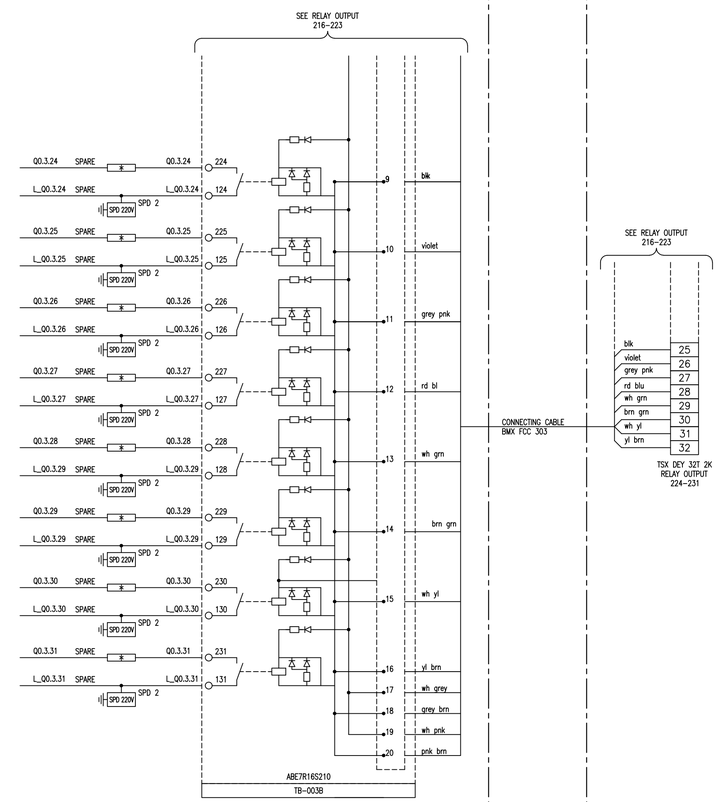

NOTES:

1. EARTH CORE MUST BE YELLOW/GREEN OR IT MUST BE FITTED WITH A YELLOW/GREEN SLEEVE.
2. SUB–BASE 1: ABE–7S16E2M0: 230V AC DIGITAL OUTPUT
3. SUB–BASE 2: ABE–7CPA02: 8ch ANALOG OUTPUT
4. SUB–BASE 3: ABE–7R16S210: RELAY OUTPUT
5. SUB–BASE 4: ABE–7CPA21: 4ch ANALOG OUTPUT
6. SPD 1: DEHNguard DG M TN 275
7. SPD 2: DEHNguard DG S 275 VA
8. SPD 3: BLITZDUCTOR BXT ML4 BD 24 + BASE BXT BAS
9. SPD 4: BLITZDUCTOR BXT ML2 BD S 24 + BASE BXT BAS
10. SPD 5: BLITZDUCTOR BXT ML4 BE 24 + BASE BXT BAS
11. SPD 6: BLITZDUCTOR BXT ML2 BE S 24 + BASE BXT BAS

* FUSED TERMINAL (500mA)

LINK TERMINAL

DEPARTMENT	APPROVED	DESIGNATION	DATE

CONSULTING ENGINEERS

Knight Piésold CONSULTING
P.O. BOX 221
RIVONIA
2128
TEL. 011-806 7111
FAX. 011-806 7100
EMAIL enquiries@kprsa.co.za

WSP Group Africa (Pty) Ltd
Industrial Division
Building C, Knightsbridge,
33 Sloane Street, Bryanston, 2191
Tel: +27 11 361 1300 Fax: +27 11 361 1431 www.wsp.com

SURVEYED	
DESIGNED	W BRITZ
DRAWN	M DYKE
CHECKED	W BRITZ
SERVICES CHECKED	
GEOTECHNICAL INVESTIGATION	
SERVITUDES	
APPROVED	
Pr. Eng. No.	
DATE	

JOHANNESBURG WATER SOC LTD

Johannesburg Water

17 HARRISON STREET
MARSHALLTOWN
2107

TEL: (011) 688-1400
FAX: (011) 688-1529

CITY OF JOHANNESBURG

BUSHKOPPIE WASTEWATER TREATMENT WORKS

INFRASTURCTURE RENEWAL PLAN

HEAD OF WORKS PLC–TYP

DIGITAL OUTPUT MODULE: SUB–BASE 2 OF 2

RACK 0 / SLOT 3B (216–231)

DESIGN MANAGER

DATE

SCALE: NTS

	AMENDMENTS	APPROVED	DATE
T0	ISSUED FOR TENDER	W BRITZ	08.08.19
T1	RE–ISSUED FOR TENDER	CdT	07.01.25

DRAWING No.

JW NUMBER

CONSULTANT'S NUMBER: TYP–R0S3B–DO

FILE No

T0 T1

Z:\461000xx\461100563 – Bushkoppie WWTW HOW\51 CI\02–CADD\01–Current\03–Drawings\Typical Wiring\ING0645D–TYP–R0S3B–DO revT1.dwg Jan 09, 2025 – 12:47pm

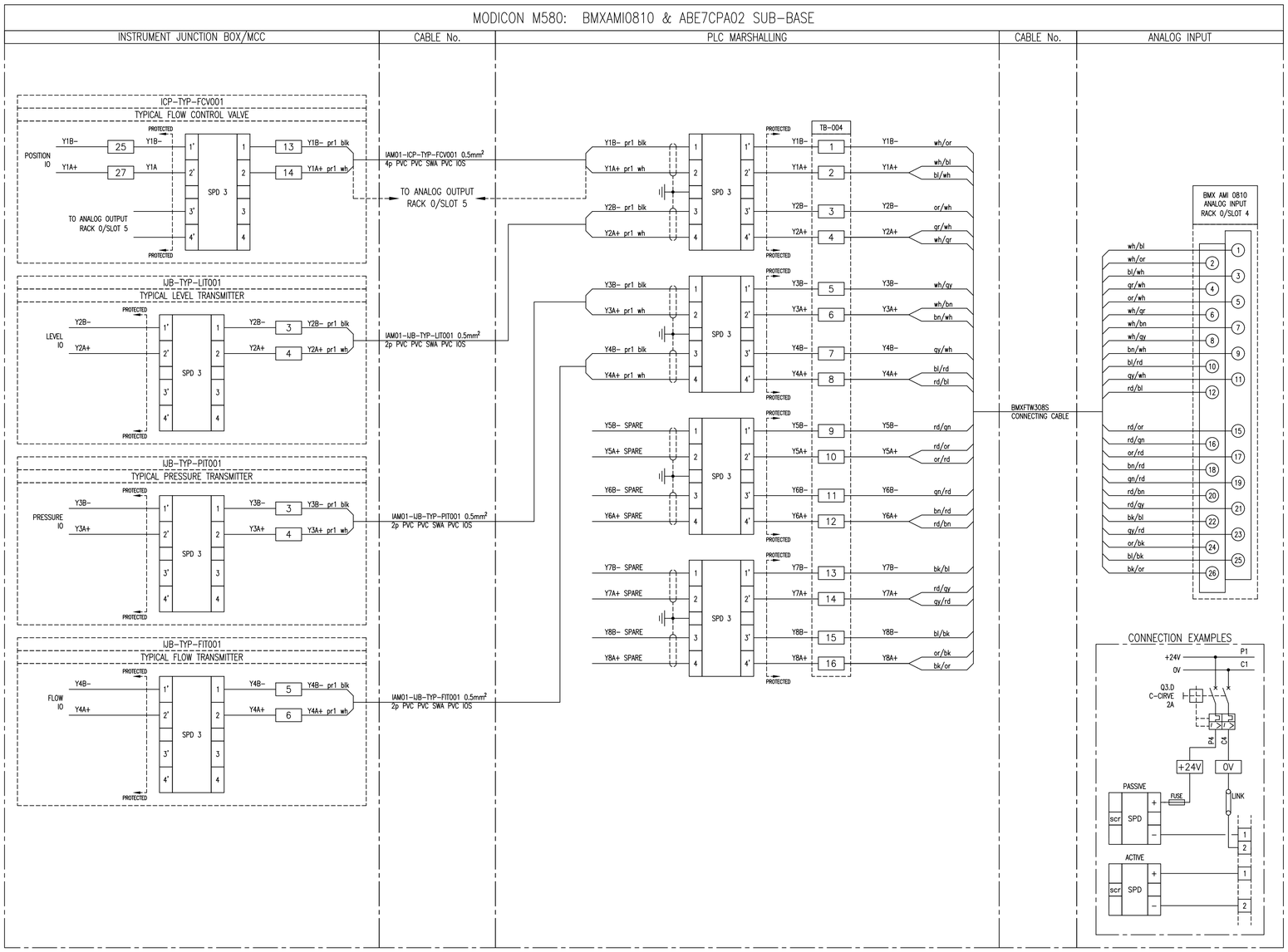

NOTES:

1. EARTH CORE MUST BE YELLOW/GREEN OR IT MUST BE FITTED WITH A YELLOW/GREEN SLEEVE.
2. SUBBASE 1: ABE-7S16E2M0: 230V AC DIGITAL INPUT
3. SUBBASE 2: ABE-7CPA02: 8ch ANALOG INPUT
4. SUBBASE 3: ABE-7R16S210: RELAY OUTPUT
5. SUBBASE 4: ABE-7CPA21: 4ch ANALOG OUTPUT
6. SPD 1: DEHNguard DG M TN 275
7. SPD 2: DEHNguard DG S 275 VA
8. SPD 3: BLITZDUCTOR BXT ML4 BD 24 + BASE BXT BAS
9. SPD 4: BLITZDUCTOR BXT ML2 BD S 24 + BASE BXT BAS
10. SPD 5: BLITZDUCTOR BXT ML4 BE 24 + BASE BXT BAS
11. SPD 6: BLITZDUCTOR BXT ML2 BE S 24 + BASE BXT BAS

* FUSED TERMINAL (500mA)

LINK TERMINAL

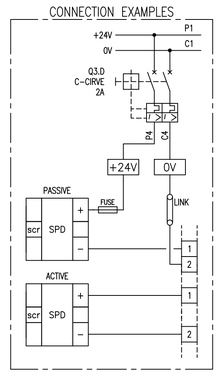

DEPARTMENT	APPROVED	DESIGNATION	DATE

CONSULTING ENGINEERS

Knight Piésold CONSULTING
P.O. BOX 221
RIVONIA
2128
TEL. 011-806 7111
FAX. 011-806 7100
EMAIL enquiries@kprsa.co.za

WSP Group Africa (Pty) Ltd
Industrial Division
Building C, Knightsbridge,
33 Sloane Street, Bryanston, 2191
Tel: +27 11 361 1300 Fax: +27 11 361 1431 www.wsp.com

SURVEYED	
DESIGNED	W BRITZ
DRAWN	M DYKE
CHECKED	W BRITZ
SERVICES CHECKED	
GEOTECHNICAL INVESTIGATION	
SERVITUDES	
APPROVED	
Pr. Eng. No.	
DATE	

JOHANNESBURG WATER SOC LTD

Johannesburg Water

17 HARRISON STREET
MARSHALLTOWN
2107

TEL: (011) 688-1400
FAX: (011) 688-1529

CITY OF JOHANNESBURG

BUSHKOPPIE WASTEWATER TREATMENT WORKS

INFRASTURCTURE RENEWAL PLAN

HEAD OF WORKS PLC-TYP

ANALOG INPUT MODULE

RACK 0 / SLOT 4

DESIGN MANAGER

DATE

SCALE: NTS

AMENDMENTS

		APPROVED	DATE
T0	ISSUED FOR TENDER	W BRITZ	08.08.19
T1	RE-ISSUED FOR TENDER	CdT	07.01.25

DRAWING No.

JW NUMBER

CONSULTANT'S NUMBER: TYP-R0S4-AI

FILE No

T0 T1

Z:\461000xx\46100563 - Bushkoppie WWTW HOW\51 CI\02-CADD\01-Current\03-Drawings\Typical Wiring\ING0645D-TYP-R0S4-AI revT1.dwg Jan 09, 2025 - 12:46pm

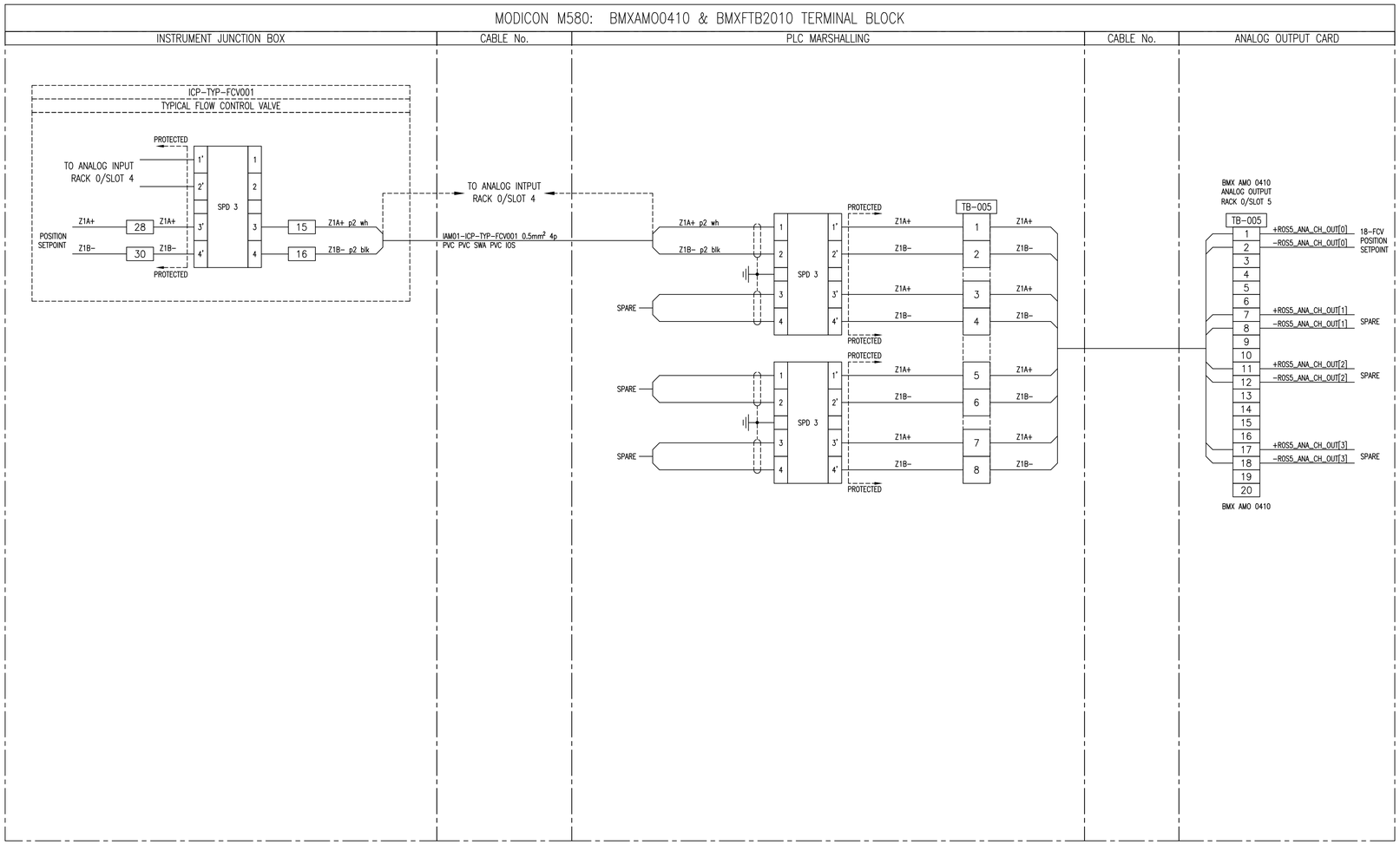

NOTES:

1. EARTH CORE MUST BE YELLOW/GREEN OR IT MUST BE FITTED WITH A YELLOW/GREEN SLEEVE.
2. SUBBASE 1: ABE-7S16E2M0: 230V AC DIGITAL INPUT
3. SUBBASE 2: ABE-7CPA02: 8ch ANALOG INPUT
4. SUBBASE 3: ABE-7R16S210: RELAY OUTPUT
5. SUBBASE 4: ABE-7CPA21: 4ch ANALOG OUTPUT
6. SPD 1: DEHNguard DG M TN 275
7. SPD 2: DEHNguard DG S 275 VA
8. SPD 3: BLITZDUCTOR BXT ML4 BD 24 + BASE BXT BAS
9. SPD 4: BLITZDUCTOR BXT ML2 BD S 24 + BASE BXT BAS
10. SPD 5: BLITZDUCTOR BXT ML4 BE 24 + BASE BXT BAS
11. SPD 6: BLITZDUCTOR BXT ML2 BE S 24 + BASE BXT BAS

[*] FUSED TERMINAL (500mA)

[ ] LINK TERMINAL

DEPARTMENT	APPROVED	DESIGNATION	DATE

CONSULTING ENGINEERS

Knight Piésold CONSULTING
P.O. BOX 221
RIVONIA
2128
TEL. 011-806 7111
FAX. 011-806 7100
EMAIL enquiries@kprsa.co.za

WSP Group Africa (Pty) Ltd
Industrial Division
Building C, Knightsbridge,
33 Sloane Street, Bryanston, 2191
Tel: +27 11 361 1300 Fax: +27 11 361 1431 www.wsp.com

SURVEYED	
DESIGNED	W BRITZ
DRAWN	M DYKE
CHECKED	W BRITZ
SERVICES CHECKED	
GEOTECHNICAL INVESTIGATION	
SERVITUDES	
APPROVED	
Pr. Eng. No.	
DATE	

JOHANNESBURG WATER SOC LTD

Johannesburg Water

17 HARRISON STREET
MARSHALLTOWN
2107

TEL: (011) 688-1400
FAX: (011) 688-1529

CITY OF JOHANNESBURG

BUSHKOPPIE WASTEWATER TREATMENT WORKS
INFRASTURCTURE RENEWAL PLAN
HEAD OF WORKS PLC-TYP
ANALOG OUTPUT MODULE
RACK 0 / SLOT 5

DESIGN MANAGER

DATE

SCALE: NTS

AMENDMENTS

		APPROVED	DATE
T0	ISSUED FOR TENDER	W BRITZ	08.08.19
T1	RE-ISSUED FOR TENDER	CdT	07.01.25

DRAWING No.

JW NUMBER

CONSULTANT'S NUMBER
TYP-ROS5-AO

FILE No

T0 T1

Z:\461000xx\46100563 - Bushkoppie WWTW HOW\51 CI\02-CADD\01-Current\03-Drawings\Typical Wiring\ING0645D-TYP-ROS5-AO revT1.dwg Jan 09, 2025 - 12:58pm